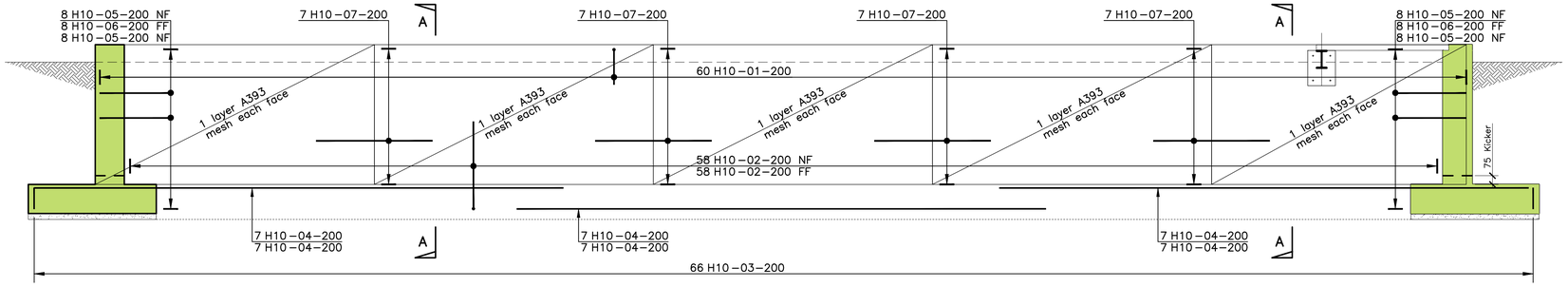

ELEVATION OF RETAINING WALL A

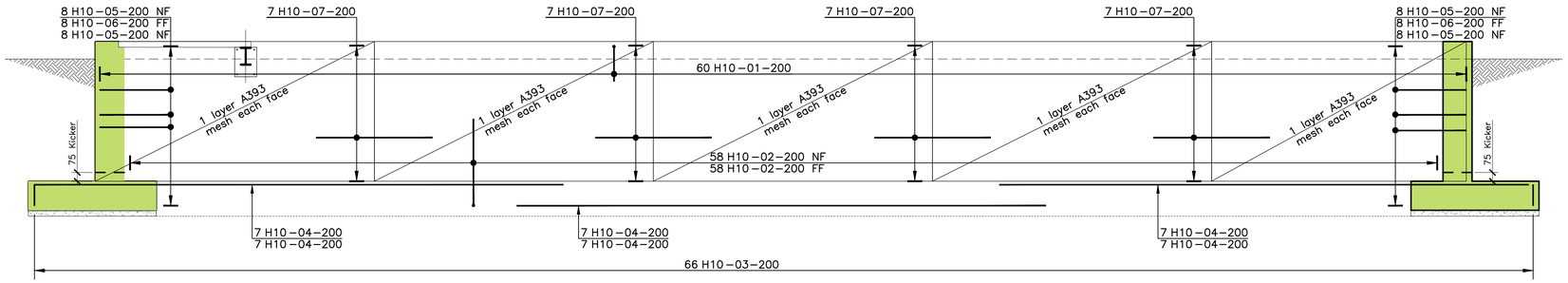

ELEVATION OF RETAINING WALL B

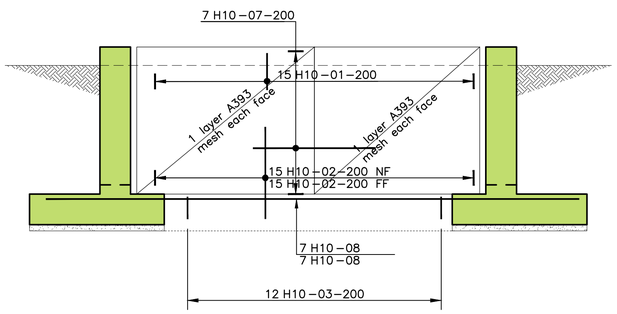

ELEVATION OF RETAINING WALL C

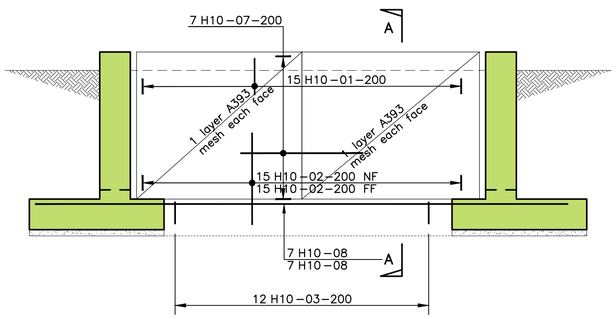

ELEVATION OF RETAINING WALL D

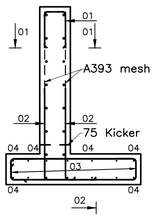

Section A–A

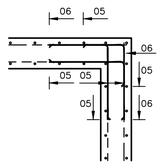

Typical Corner Detail
4 No Thus

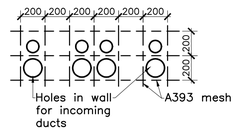

Elevation Showing Bars
Around Duct Holes

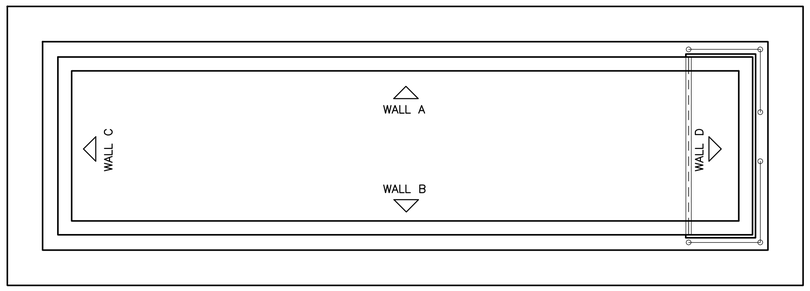

KEY PLAN
(SCALE 1:50)

© This drawing and the building works depicted are the copyright of the Engineers and may not be reproduced except by written permission.

1. THIS DRAWING TO BE READ IN CONJUNCTION WITH ALL RELEVANT ARCHTECTS, ENGINEERS AND SPECIALISTS DRAWINGS AND THE SPECIFICATION.
2. ALL CONCRETE MATERIALS TO BE IN ACCORDANCE WITH BS.8500–1:2002. ALL CONCRETE WORKMANSHIP TO BE IN ACCORDANCE WITH BS.8000–2.1:1990. ALL CONCRETE CONSTRUCTION TO BE IN ACCORDANCE WITH BS.8110–1:1997.
3. THE CONTRACTOR SHALL BE RESPONSIBLE FOR THE EXECUTION OF THE WORKS IN ACCORDANCE WITH THE DRAWINGS AND THE SPECIFICATION AND FOR THE ACCURACY OF ALL DIMENSIONS AND SETTING OUT ON SITE.
4. ALL MATERIALS MUST BE APPROVED BY THE ENGINEER PRIOR TO USE. GRADING CERTIFICATES ARE REQUIRED FOR DTp TYPE 1 SUB–BASE MATERIAL.
5. THE ENGINEER SHALL BE GIVEN 24 HOURS NOTICE FOR CHECKING FORMATIONS, REINFORCEMENT, GRANULAR FILL ETC.. CEMENT TO BE OPC TO BS.8500–2:2002.
6. ALL FOUNDATION CONCRETE TO BE GRADE C.32/40 TO BS.8500 WITH A MINIMUM CEMENT CONTENT OF 325kg/m3 AND A MAXIMUM WATER/CEMENT RATIO OF 0.55.
7. TRENCHFILL / FOUNDATION CONCRETE TO BE CAST AGAINST NATURAL VERTICAL EARTH FACES. ANY OVER EXCAVATION TO BE FILLED TO THE APPROPRIATE LEVELS INDICATED, MONOLITHICALLY, WITH THE APPROPRIATE GRADE OF CONCRETE SPECIFIED.
8. ALL ORGANIC MATERIAL / TOPSOIL TO BE REMOVED FROM THE BUILDING PLAN FOOTPRINT.

NOLAN ASSOCIATES

PRELIMINARY DRAWING

NOT TO BE USED FOR CONSTRUCTION

REV	DESCRIPTION	BY	CHKD	DATE
P1	Preliminary	KH	RW	31.07.15

GF Energy
Barton Hill, Torquay

Switch Room
Foundation R.C.

NOLAN ASSOCIATES
CONSULTING CIVIL & STRUCTURAL ENGINEERS
54 HAGLEY ROAD, EDGBASTON, BIRMINGHAM B16 8PE
TEL: 0121–454 3099 FAX: 0121–454 3059
E–MAIL: enquiries@nolanassociates.co.uk

Drawn by	Date	Plot Date	Scale
KH	19.06.15	19.06.15	1:50,25@A1
Checked by	Project No		Dwg No
RW	2015–193		010 P1