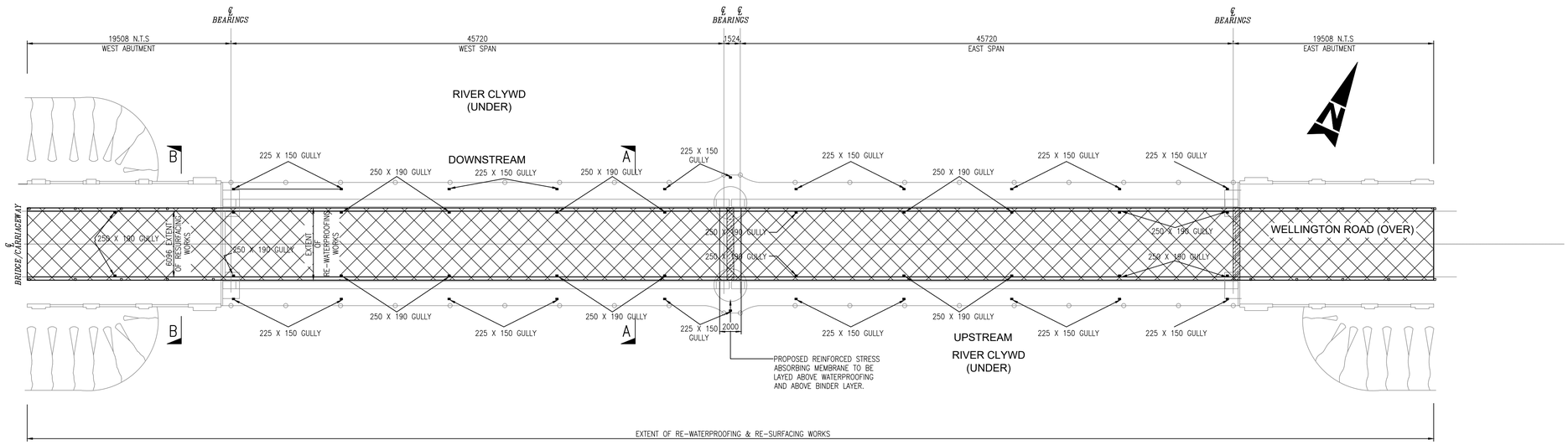


## PLAN SHOWING EXTENT OF RE-WATERPROOFING & RESURFACING WORKS

KEY:-

- EXTENT OF RE-WATERPROOFING & RESURFACING WORKS
- JOINTS TO BE REPLACED

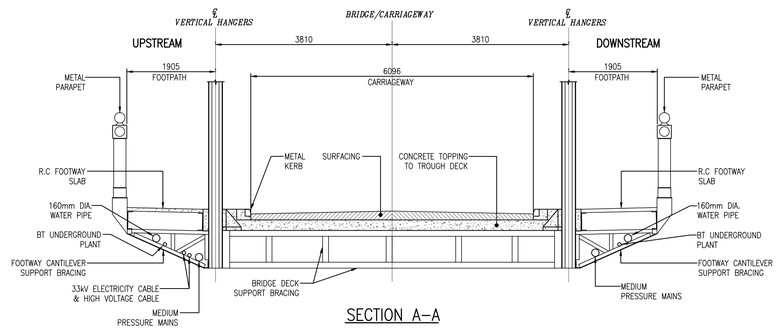


## SECTION A–A

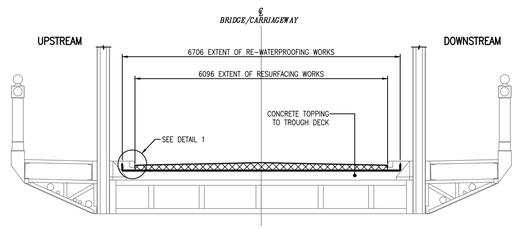


## SECTION A–A
## TYPICAL SECTION THROUGH BRIDGE

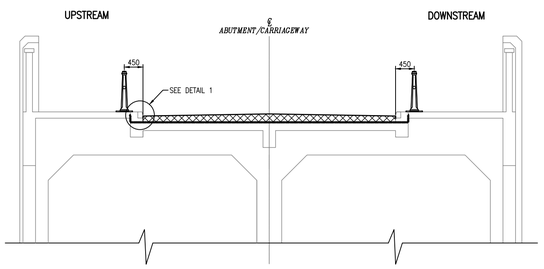


## SECTION B–B
## TYPICAL SECTION THROUGH BRIDGE ABUTMENTS

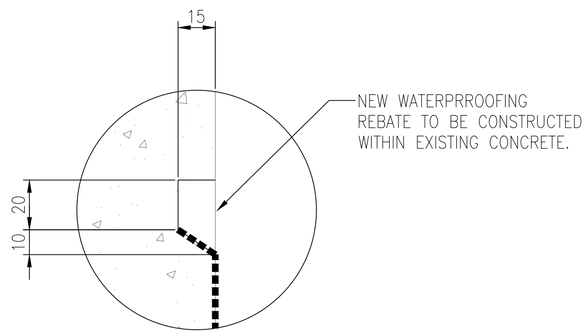


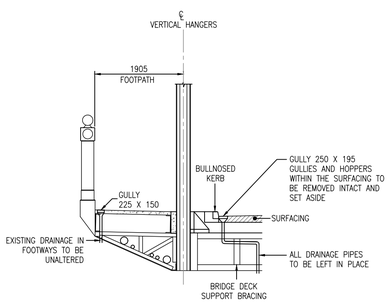


## SECTION A–A

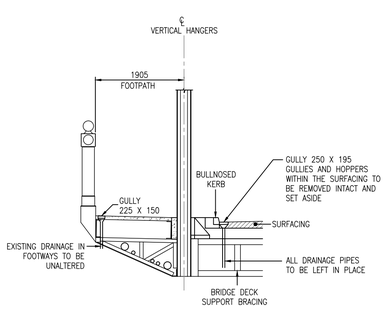


## SECTION B–B

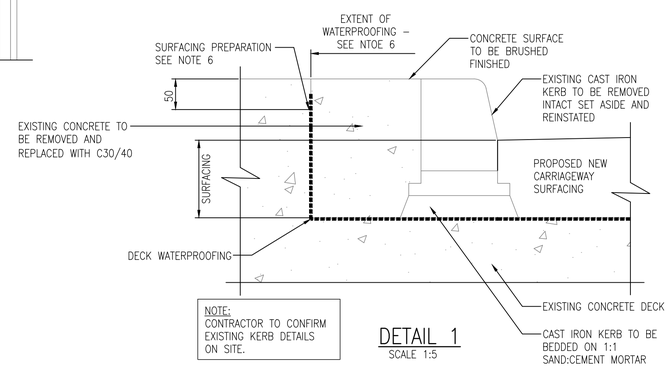


NOTE:
CONTRACTOR TO CONFIRM EXISTING KERB DETAILS ON SITE.

## DETAIL 1
SCALE 1:5

CLEIENT/CLIENT :

Cyngor sir ddinbych denbighshire County Council

## NODIADAU/NOTES

NOTES:

1. ALL DIMENSIONS IN MILLIMETERS.
2. KERBS SHALL BE REMOVED AND TAKEN TO STORE TO ALLOW WATERPROOFING WORKS TO BE CARRIED OUT. ON COMPLETION OF WATERPROOFING WORKS THE KERBS SHALL BE REINSTATED.
3. THE CONTRACTOR IS TO RECORD LINE AND LEVEL OF THE KERBS AND CARRIAGEWAY PRIOR TO REMOVAL. ALL NEW WORKS TO BE PLACED ON ORIGINAL LINE AND LEVEL AND ENSURING NO BACKFILL FROM GULLIES.
4. CARE MUST BE TAKEN NOT TO DAMAGE THE STRUCTURAL CONCRETE AND/OR STEELWORK BEHIND THE WATERPROOFING.
5. ALL SURFACES TO BE CLEARED OF EXISTING WATERPROOFING. THE EXPOSED SURFACES ARE TO BE JOINTLY INSPECTED WITH THE PROJECT MANAGER TO AGREE ANY NECESSARY REPAIRS PRIOR TO APPLICATION OF THE WATERPROOFING.
6. ALL SURFACES ARE TO BE PREPARED IN ACCORDANCE WITH THE WATERPROOFING MANUFACTURERS REQUIREMENTS. THE CONTRACTOR SHOULD NOTE THAT THE VERTICAL FACE ON THE DECK MAY BE STEEL AND WILL REQUIRE PREPARATION TO SA 21/2 BEFORE APPLICATION OF MANUFACTURER'S PRIMER.
7. THE CONTRACTOR IS TO CARRYOUT A JOINT INSPECTION OF THE EXISTING DRAINAGE WORKS WITHIN THE CONCRETE DECKING WITH THE PROJECT MANAGER TO AGREE THE EXTENT OF THE WATERPROOFING.
8. ALL DRAINAGE GULLIES TO BE UNBLOCKED USING JET WASHING METHOD. IN ADVANCE OF RE-SURFACING WORK AS PART OF ROUTING MAINTENANCE OF THE STRUCTURE. ALL GULLY OUTLETS TO BE SUITABLY COVERED DURING CONSTRUCTION WORK TO PREVENT DEBRIS ENTERING THE DRAINAGE SYSTEM.
9. REPLACE CENTRAL AND EAST EXPANSION JOINTS.

| RHIF NO. | NEWIDIADAU MODIFICATIONS | GAN | DATE | DIDDAD | DATE | GWIRIWYD |
|---|---|---|---|---|---|---|

YGC

CYNGOR GWYNEDD COUNCIL

CYNLLUN / SCHEME :

A548 - FORYD BRIDGE RESURFACING WORK

TEITL LLUNIAD / DRAWING TITLE :

GENERAL ARRANGEMENT PLAN

| | | | |
|---|---|---|---|
| DARLUNWYD GAN : DRAWN BY : | NA | DYDDIAD DARLUNWYD : DATE DRAWN : | 24/02/2023 |
| GWIRIWYD GAN : CHECKED BY : | | DYDDIAD GWIRIWYD : DATE CHECKED : | |
| Taflen Sheet 1 of 1 | | GRADDFEYDD : SCALES : | As shown @ A1 |

Rhif Lluniad
Drawing No. 8406/GA/01

CYWI REV

24/02/2023 11:00:11 \\VDE-GWYNEDD.GOV.UK@SSL\PROJECTS\8406 - COMPUTER DESIGN PROGRAMS\AUTOCAD\SIGN PLAN FOR FORYD BRIDGE\DWG