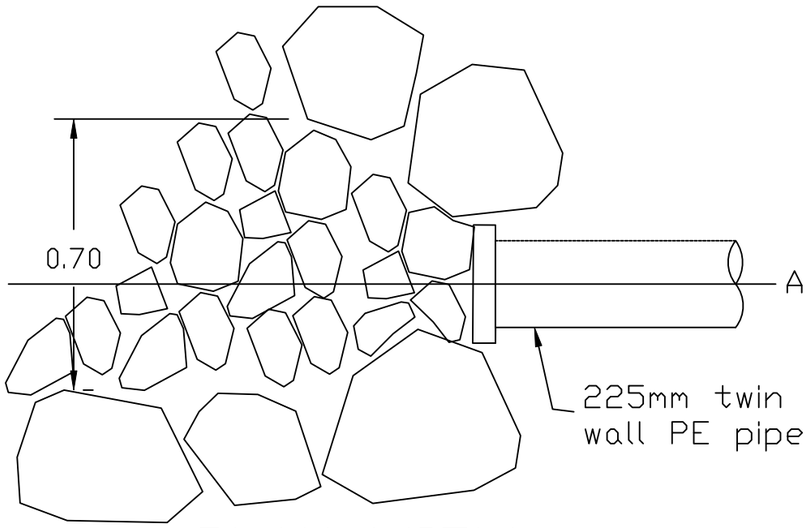


PLAN VIEW

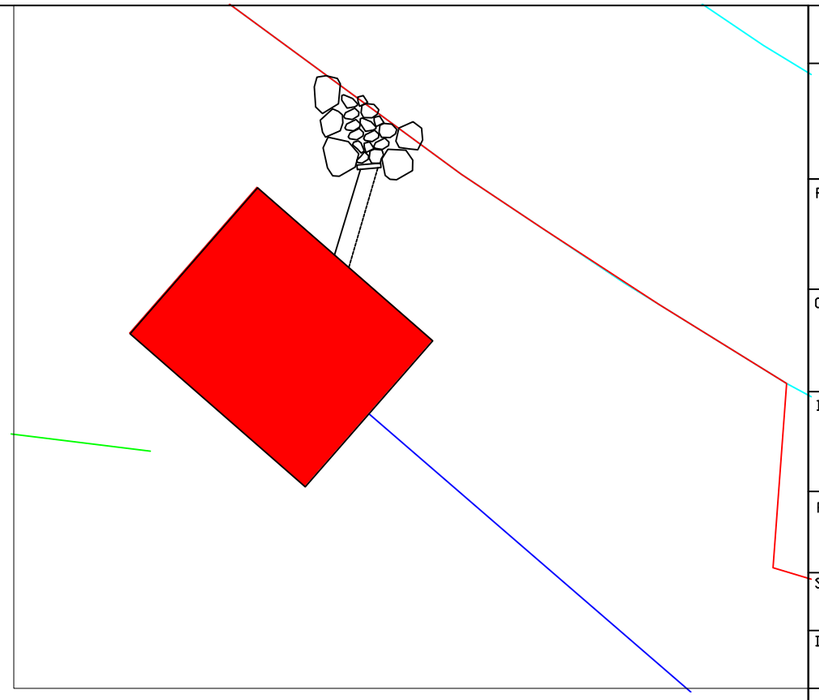

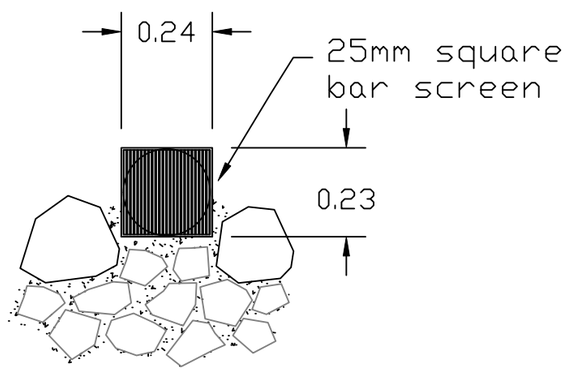


Section B-B

Section A-A

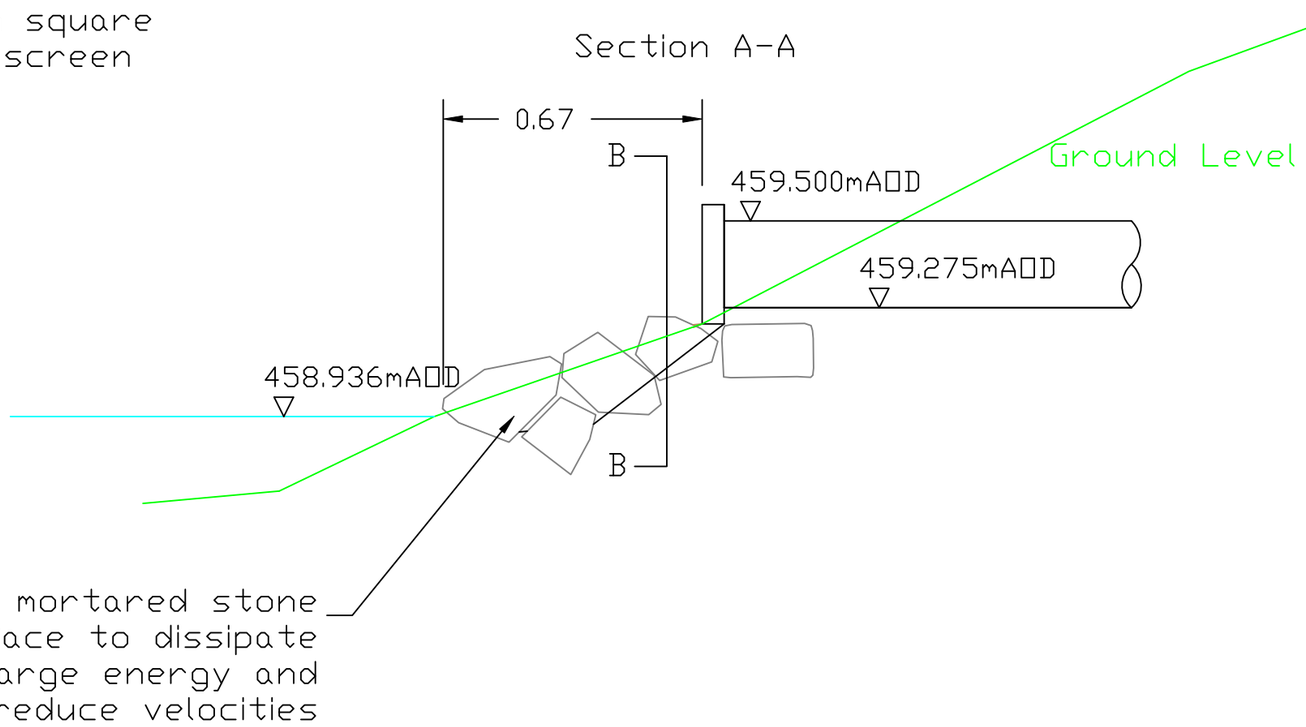


© 2015

PRELIMINARY DRAWING FOR CONSENTING PURPOSES - NOT FOR CONSTRUCTION

Project:
Tyle Garw

Client:
Adam Cropper

Drawing Title:
Outfall

File Name:
TG-DWG-Outfall-A-150618-DM

| Scale: | Revision: | Sheet: |
|---|---|---|
| 1:15 @ A3 | B | 1 OF 1 |

| Drawn by: | Date: |
|---|---|
| DM | 15/06/2023 |

Taken from OS Mastermap 1:1250
c Crown copyright. All rights reserved 2015.
License number 100022432

NOTES:

LAND OWNERSHIP
All land for development is leased by the applicant under a Joint Venture with the landowners.

CONSTRUCTION NOTES
The penstock is a 180mm HDPE (polyethylene) pipe buried along its length (approx. 735m long).

For access, a minimum of 2m easement is required along the route of the penstock pipe.

TOLERANCES
The final route of the pipeline may vary marginally as site conditions dictate.

Revisions

| Rev | Description | Approved | Issued |
|---|---|---|---|
| A | Original | DM | 15/06/18 |
| | | | |
| | | | |
| | | | |
| | | | |
| | | | |
| | | | |
| | | | |
| | | | |
| | | | |

C:/Users/Dan/Dropbox (Ellergreen)/Shared Dropbox/EGH Technical Library/Document Templates/Logo/Ellergreen Hydro Logo High Res.jpg