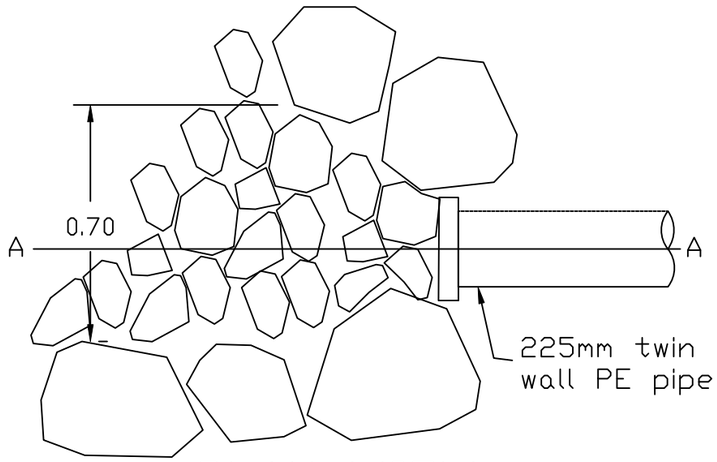

PLAN VIEW

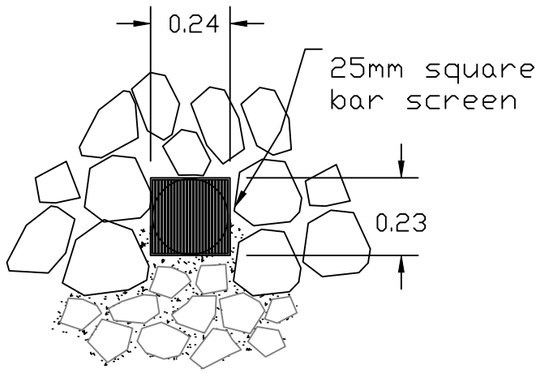

Section B-B

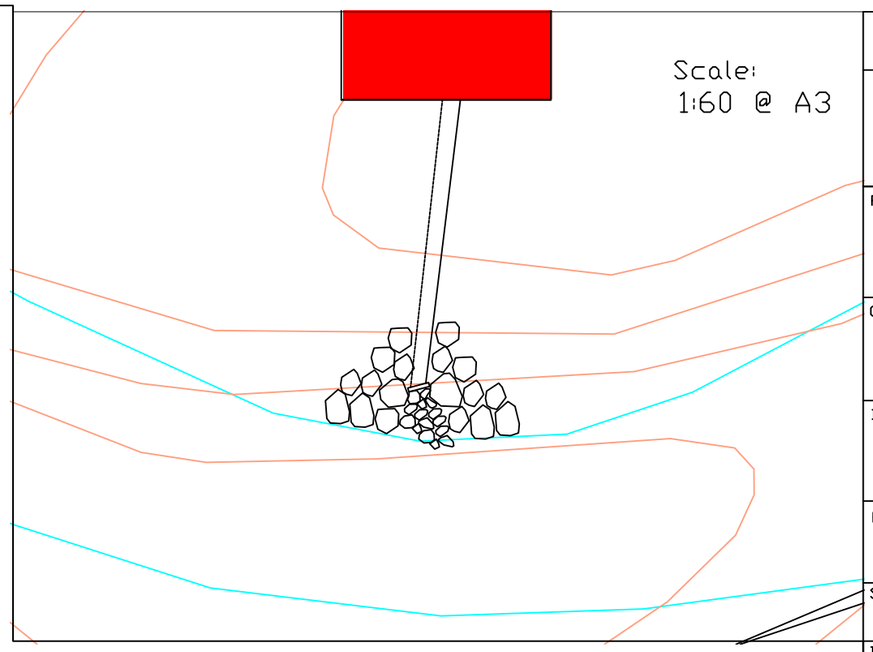

Scale:
1:15 @ A3

Section A-A

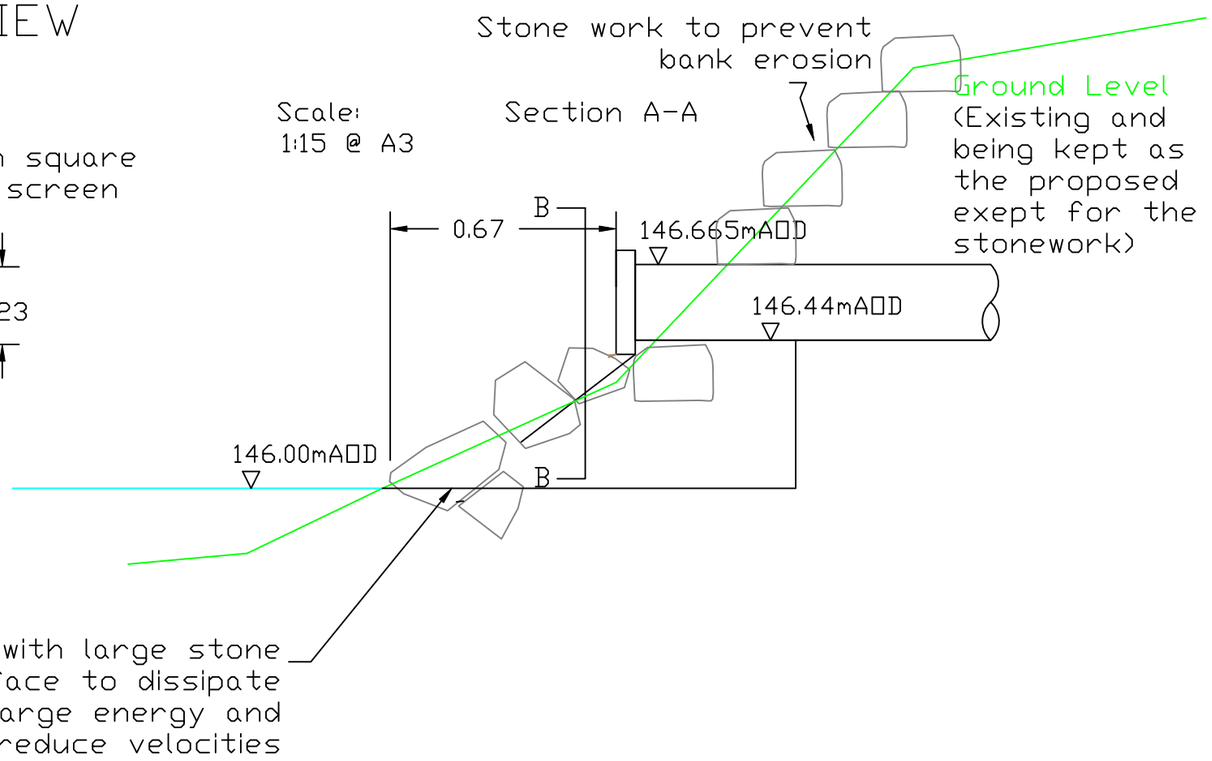

© 2015

PRELIMINARY DRAWING FOR CONSENTING PURPOSES - NOT FOR CONSTRUCTION

Project:
Plas Farm

Client:
Adam Cropper

Drawing Title:
Outfall

File Name:
PFH-DWG-Outfall-D-160724-ARC

Scale:	Revision:	Sheet:
1:15 @ A3	D	1 OF 1

Drawn by:	Date:
ARC	16/07/2024

Taken from OS Mastermap 1:1250
c Crown copyright. All rights reserved 2015.
License number 100022432

Revisions

Rev	Description	Approved	Issued
A	Original	DM	15/06/18