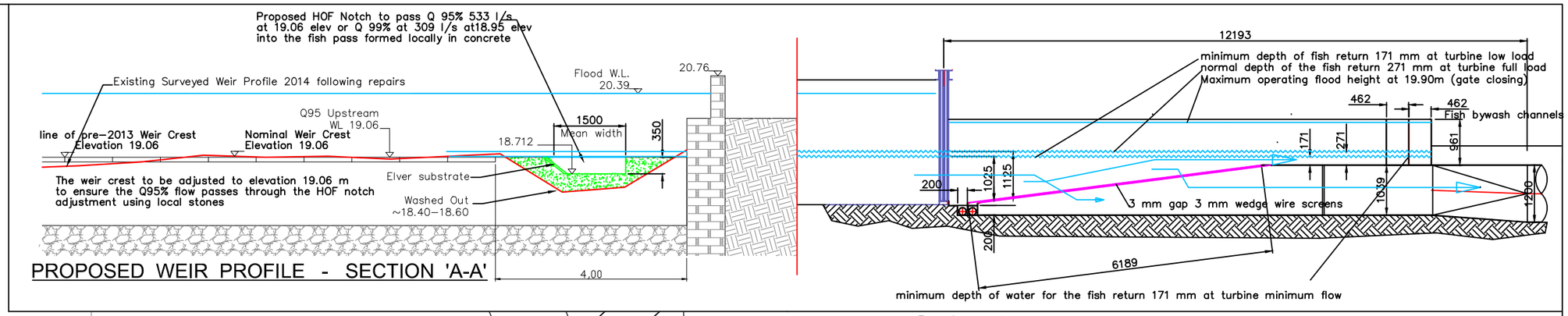

PROPOSED WEIR PROFILE - SECTION 'A-A'

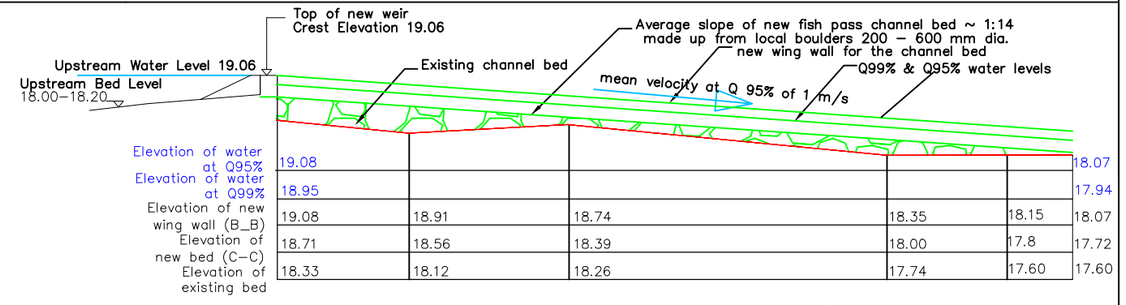

Elevation of water at Q95%	19.08				18.07
Elevation of water at Q99%	18.95				17.94
Elevation of new wing wall (B_B)	19.08	18.91	18.74	18.35	18.15	18.07
Elevation of new bed (C–C)	18.71	18.56	18.39	18.00	17.8	17.72
Elevation of existing bed	18.33	18.12	18.26	17.74	17.60	17.60

PROPOSED WEIR / FISH PASS - SECTION 'B-B' & 'C-C'

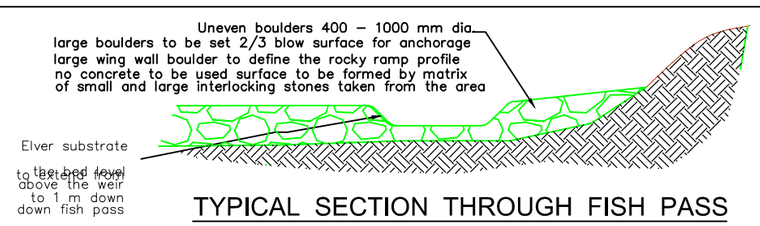

TYPICAL SECTION THROUGH FISH PASS

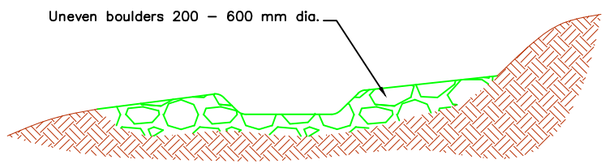

TYPICAL SECTION THROUGH PLUNGE POOLS

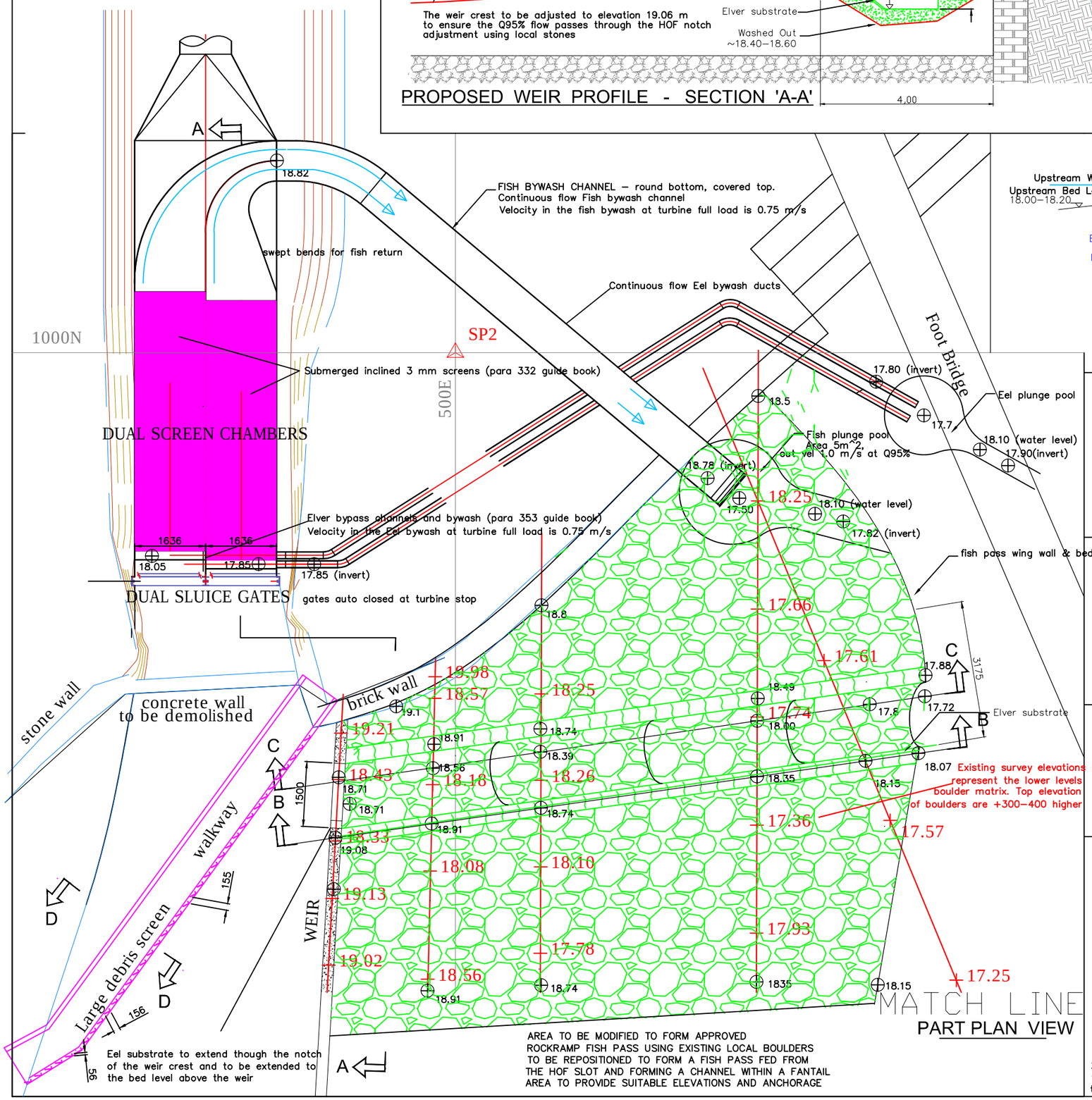

PART PLAN VIEW

REFERENCE DRAWINGS

179–601 :– COCHWILLAN WEIR SURVEY AND PRELIMINARY FISH PASS PROPOSALS
179–602 :– COCHWILLAN WEIR PROFILE AND SECTIONS

SECTION D - D

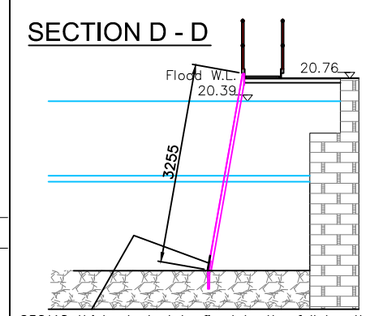

250*10 thick steel plate fixed to the full length of the large debris screen to guide Elvers away from the turbine abstraction point

REV.	DESCRIPTION	DRAWN	CHECKED	APPV'D	DATE

PROJECT: COCHWILLAN LOWER HYDRO
PROJECT No. 179
ADDRESS: PENRHYN ESTATE, BANGOR
Allied Hydropower

DRAWING TITLE: FISH PASS GENERAL ARRANGEMENT

DRAWING NUMBER	SCALE	DATE	REVISION
179–603	1:50	21/8/14	D