Wyn Jones Afon Gennog Weir Overall Dimensions

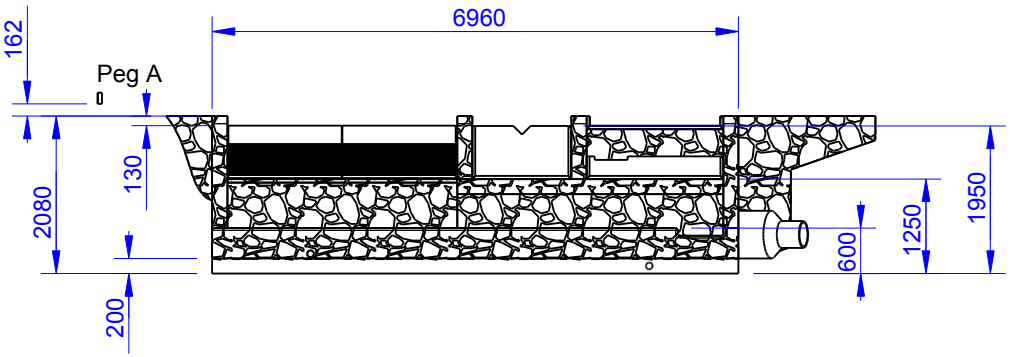

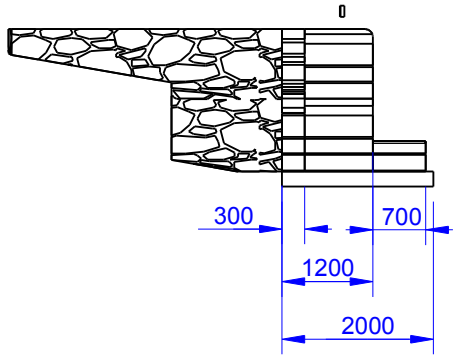

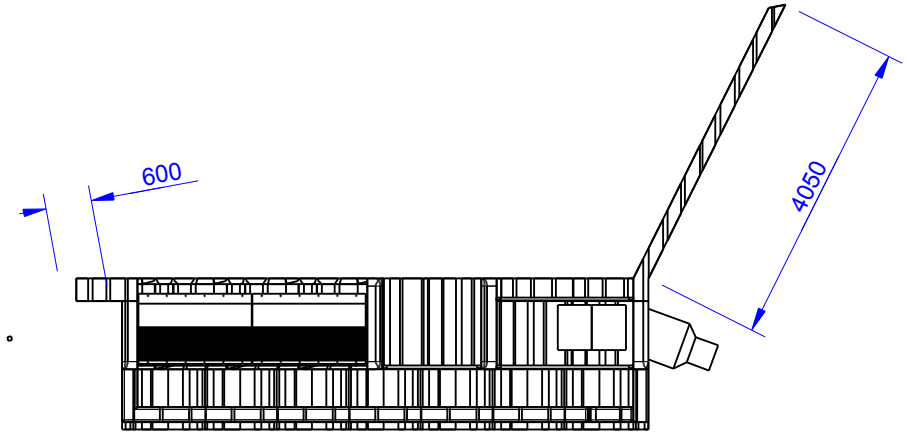

0 2000 4000mm

Client : **Wyn Jones** *Address :* Bryniog-Isa, Melin Y Coed Llanwrst, LL26 0TR *Drawn By :* MJP	Date : 17/08/13 Scale : 1 : 100 Drawing No : 130817MP04 Version : 3	Revision Details v2 : Mortared Rock Construction v3 : Take fixed at 50%	Greenearth Hydro Greenearth Hydro Limited Bronafon, Bridge Street, Llanfyllin, Powys, SY22 5AU Tel: 01691 648 378 www.greenearthhydro.co.uk Company Registration Number 7417466 MCS Hydro Transition Installer 123