BACKFILLED TO THE COANDA CREST LEVEL WITH LOCALLY DERIVED SEDIMENTS GRADED TO AN EQUIVALENT PARTICLE SIZE DISTRIBUTION TO THE BED LOAD

COANDA SCREEN
WITH PREFABRICATED SUMP
ALL FROM 304 STAINLESS STEEL
1.3 MM APERTURE

CONSTRUCTION NOTES
The weir will be constructed by positioning the prefabricated screen and sump and forming a concrete structure around it.

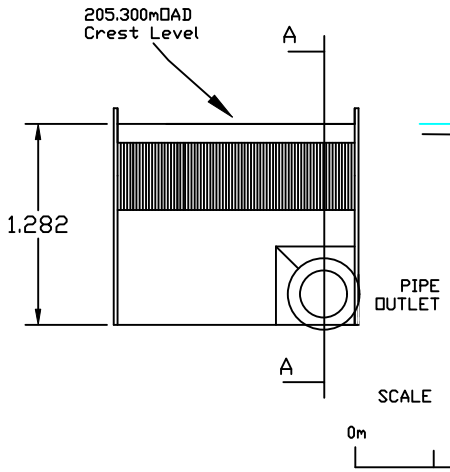

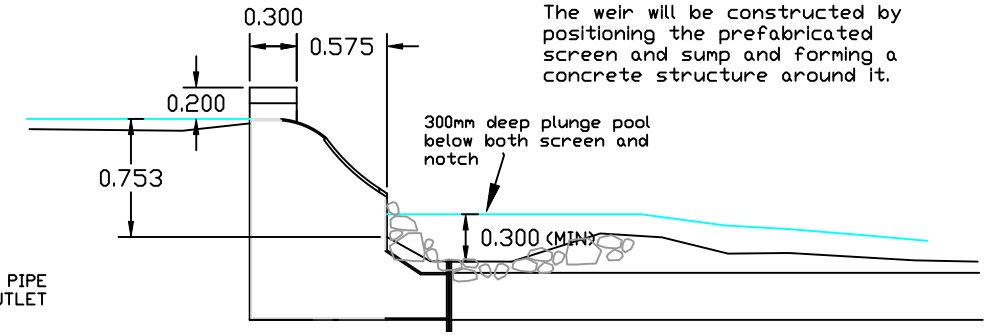

SECTION A-A

NOTCH SIZED TO DISCHARGE 7 LPS (Q95) COMPENSATION FLOW

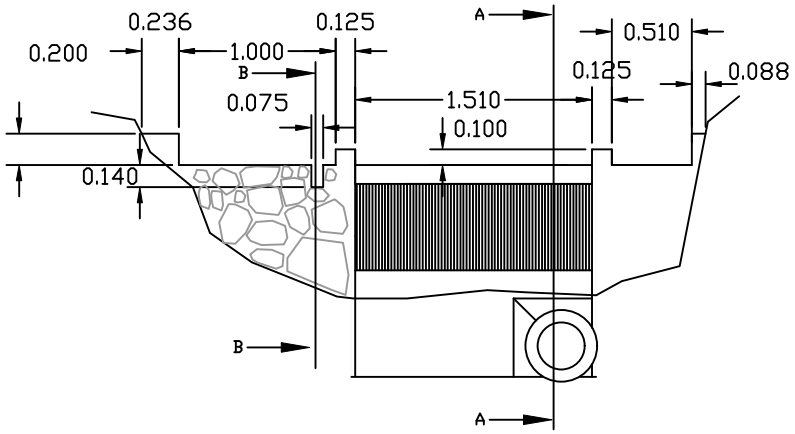

INSTALLED ELEVATION

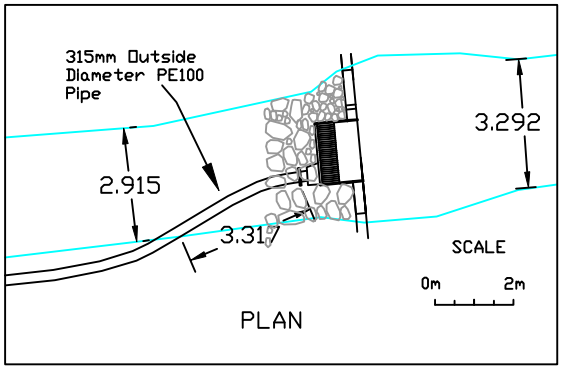

PLAN

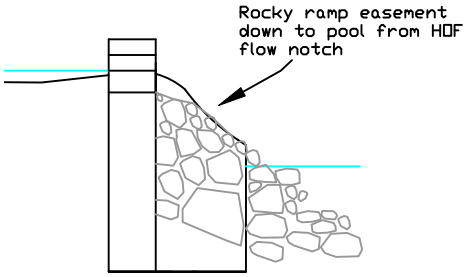

SECTION B-B

© 2015

PRELIMINARY DRAWING FOR CONSENTING PURPOSES - NOT FOR CONSTRUCTION

Project:
Cilybebyll Hydro

Client:
Richard Bowen

Drawing Title:
Intake

File Name:
CYBH-DWG-Intake-A-280725-ARC

Scale:	Revision:	Sheet:
1:30 @ A3	C	1 OF 1

Drawn by:	Date:
ARC	14/01/2026

Taken from OS Mastermap 1:1250
c Crown copyright. All rights reserved 2015.
License number 100022432

NOTES:

LAND OWNERSHIP
All land for development is owned by the applicant apartfrom the far side of watercourse which has agreement in place with neighbouring landowner

CONSTRUCTION NOTES
The penstock is a 315mm HDPE (polyethylene) pipe buried along its length.

TOLERANCES
The final route of the pipeline may vary marginally as site conditions dictate.

Revisions

Rev	Description	Approved	Issued
A	Original	ARC	28/07/25
B	Crest level update	ARC	22/12/25
C	Added information for NRW	ARC	14/01/26