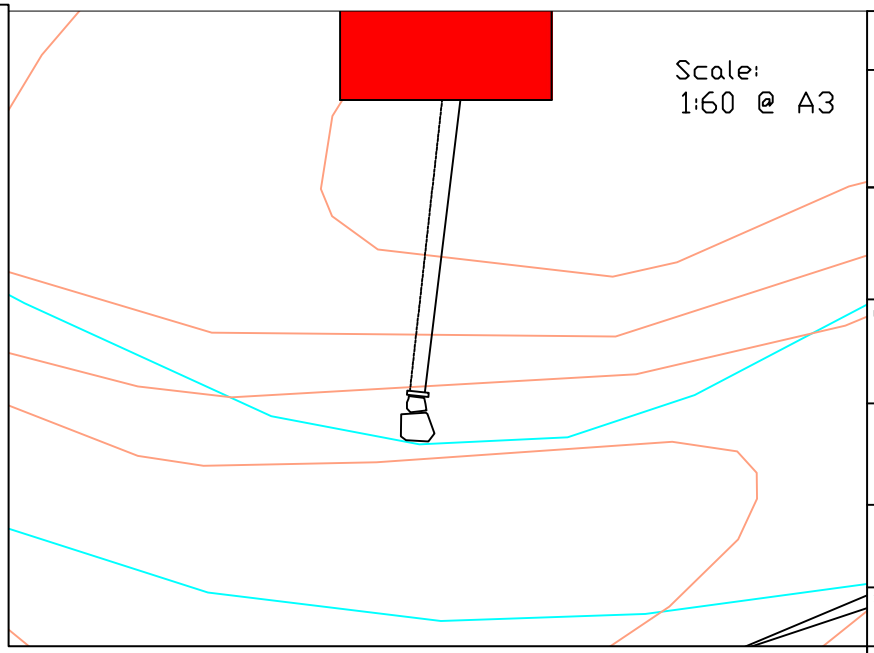

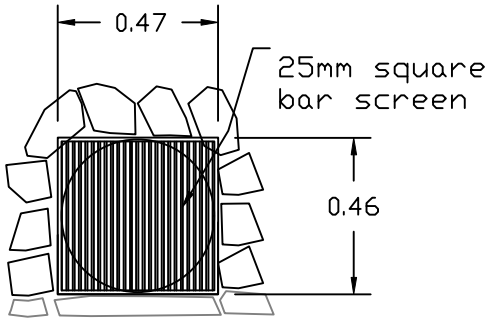

Section A-A

Scale:
1:15 @ A3

Section A-A

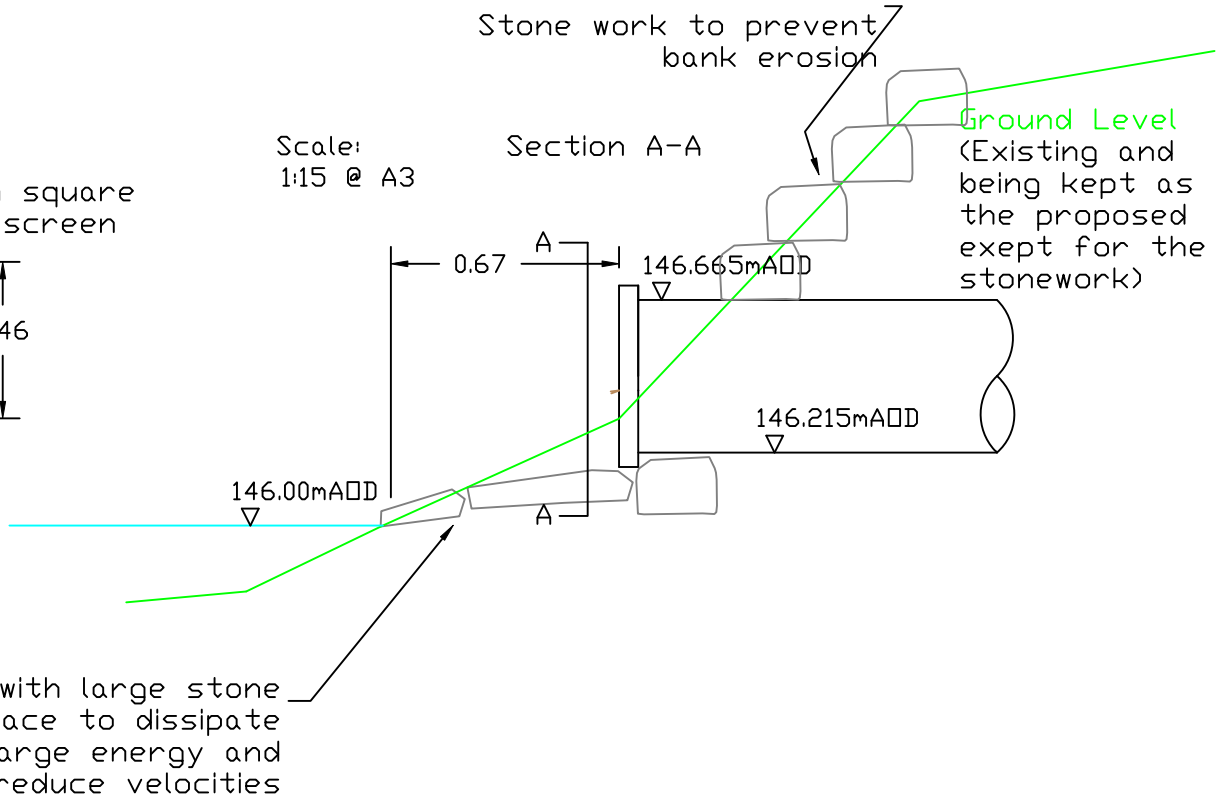

© 2015

PRELIMINARY DRAWING FOR CONSENTING PURPOSES - NOT FOR CONSTRUCTION

Project:
Cilybebyll Hydro

Client:
Adam Cropper

Drawing Title:
Outfall

File Name:
CYBH-DWG-Outfall-A-261125-ARC

Scale:	Revision:	Sheet:
1:15 @ A3	A	1 OF 1

Drawn by:	Date:
ARC	26/11/2025

Taken from OS Mastermap 1:1250
c Crown copyright. All rights reserved 2015.
License number 100022432

Revisions

Rev	Description	Approved	Issued