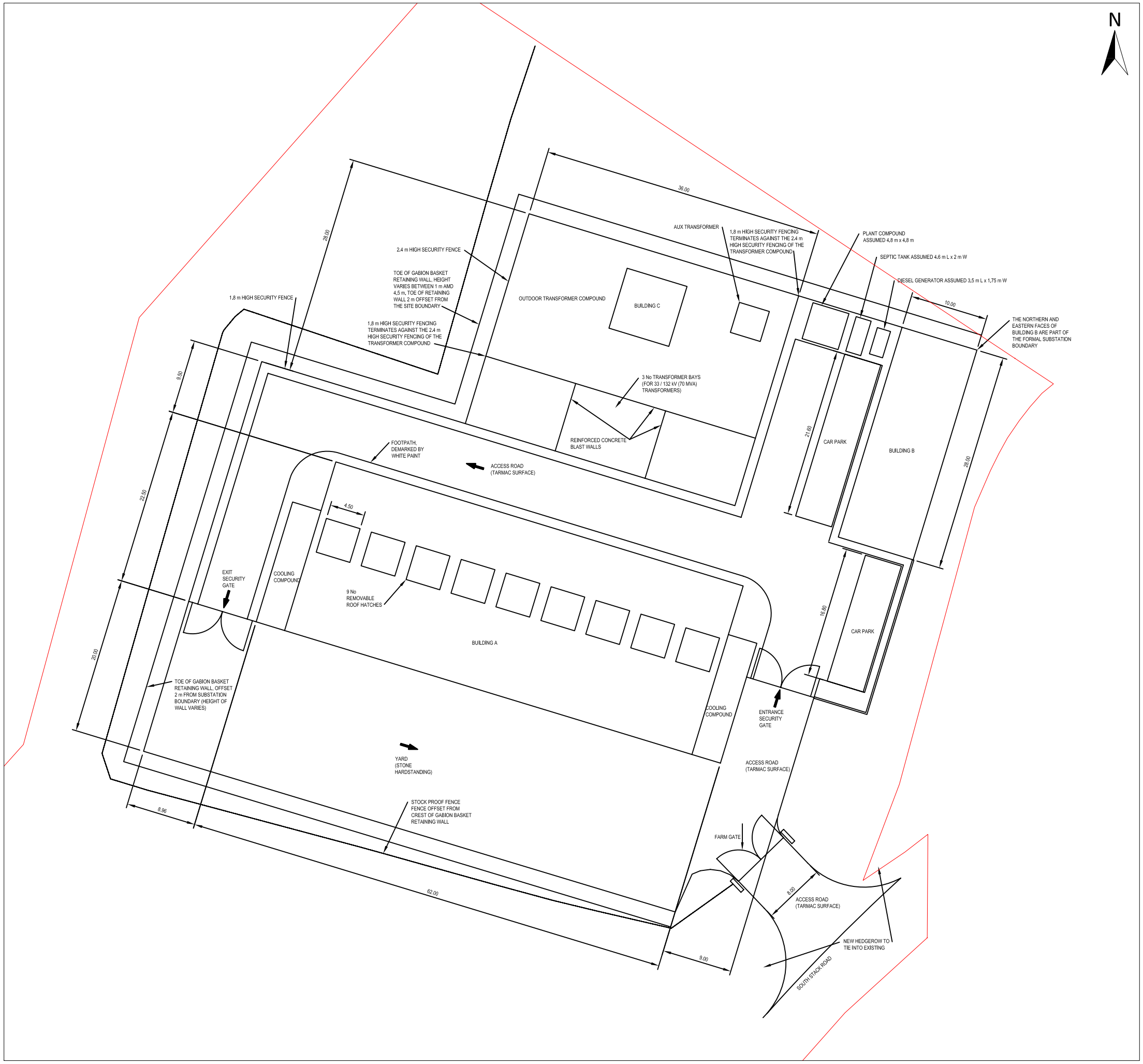

Client:	Project:
MENTER MÔN	MORLAIS DEMONSTRATION ZONE ORDER

Title:

TRANSPORT AND WORKS ACT 1992
MORLAIS DEMONSTRATION ZONE ORDER
GENERAL ARRANGEMENT - LANDFALL SUBSTATION
ISLE OF ANGLESEY (YNYS MÔN)

Figure:	Drawing No:
8	70061106-008

Revision:	Date:	Drawn:	Checked:	Size:	Scale:
01	09/08/19	JSdS	JP	A3	1:500

Co-ordinate system: British National Grid