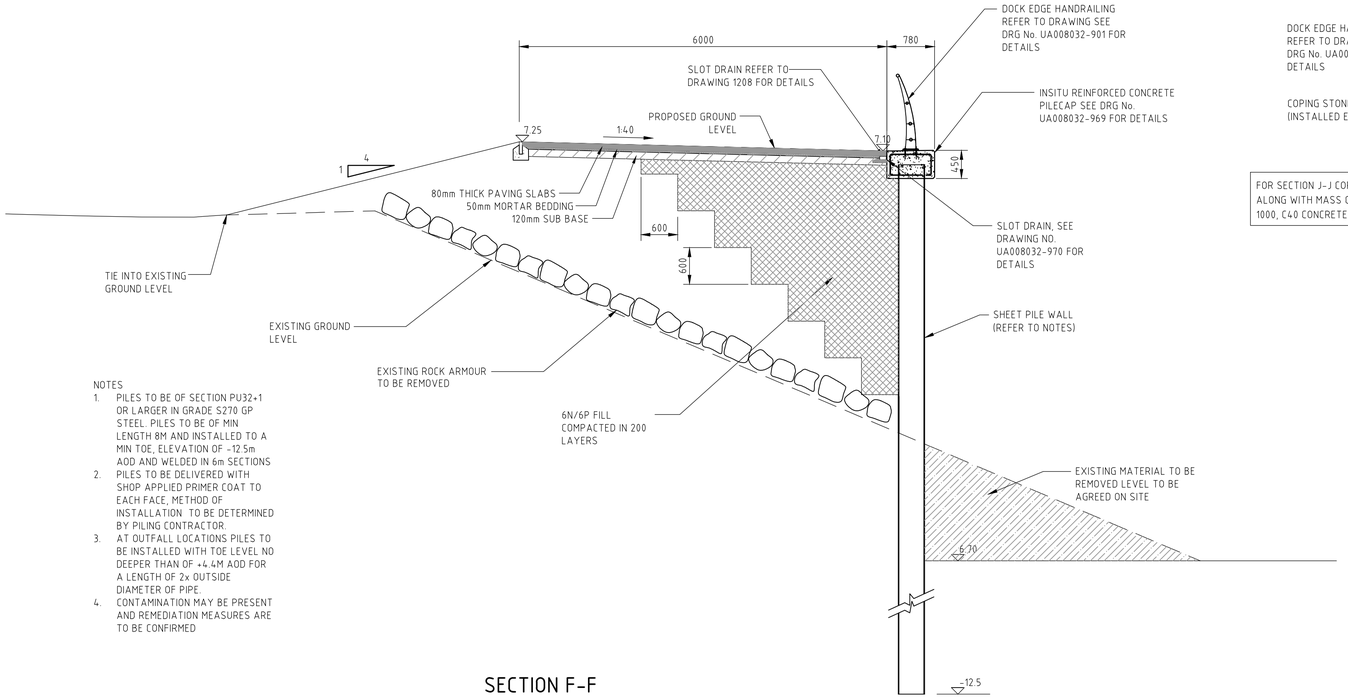

NOTES
1. PILES TO BE OF SECTION PU32+1 OR LARGER IN GRADE S270 GP STEEL. PILES TO BE OF MIN LENGTH 8M AND INSTALLED TO A MIN TOE, ELEVATION OF -12.5m AOD AND WELDED IN 6m SECTIONS
2. PILES TO BE DELIVERED WITH SHOP APPLIED PRIMER COAT TO EACH FACE, METHOD OF INSTALLATION TO BE DETERMINED BY PILING CONTRACTOR.
3. AT OUTFALL LOCATIONS PILES TO BE INSTALLED WITH TOE LEVEL NO DEEPER THAN OF +4.4M AOD FOR A LENGTH OF 2x OUTSIDE DIAMETER OF PIPE.
4. CONTAMINATION MAY BE PRESENT AND REMEDIATION MEASURES ARE TO BE CONFIRMED

SECTION F-F
SCALE 1:50

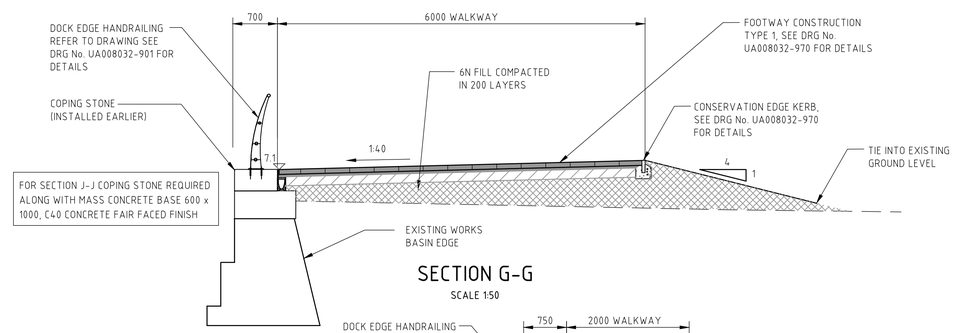

SECTION G-G
SCALE 1:50

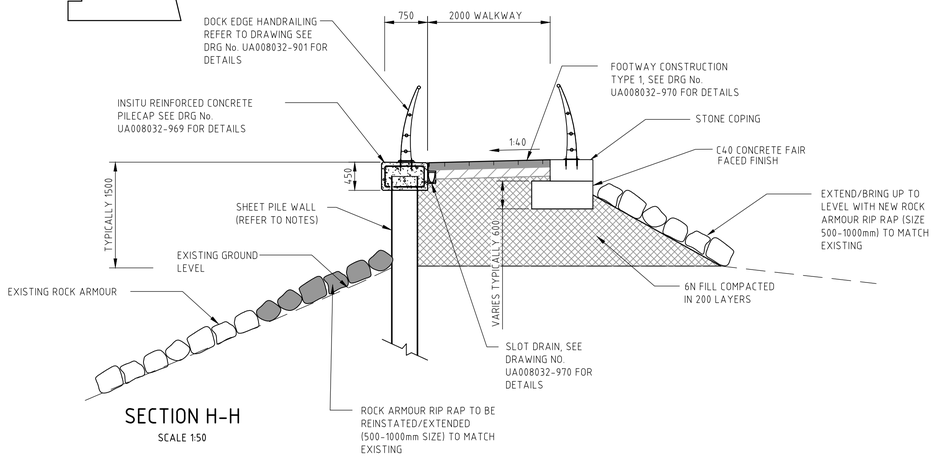

SECTION H-H
SCALE 1:50

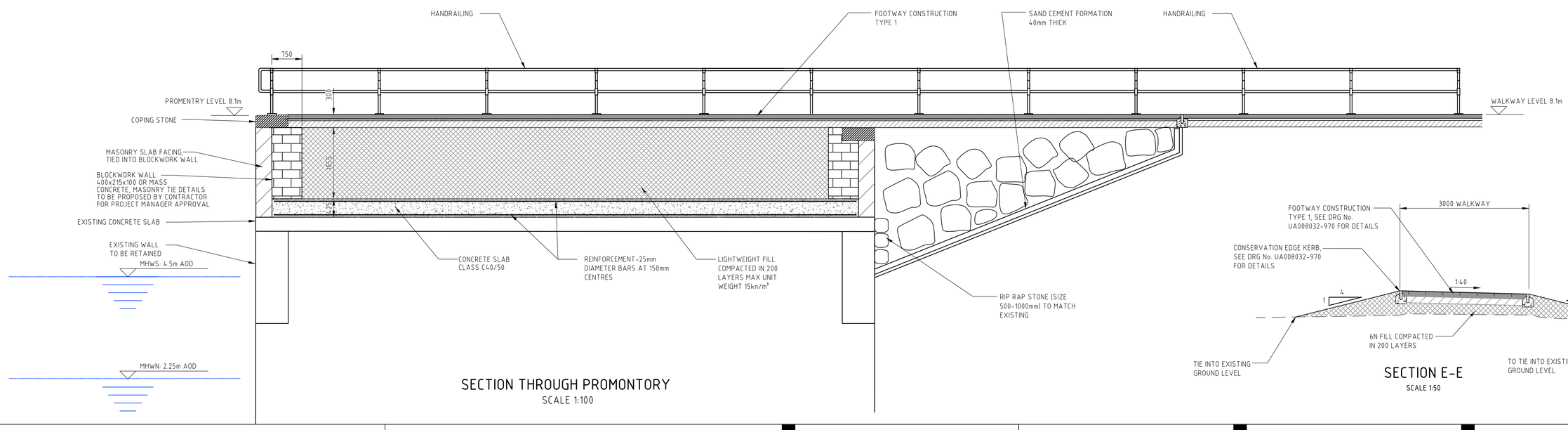

SECTION THROUGH PROMONTORY
SCALE 1:100

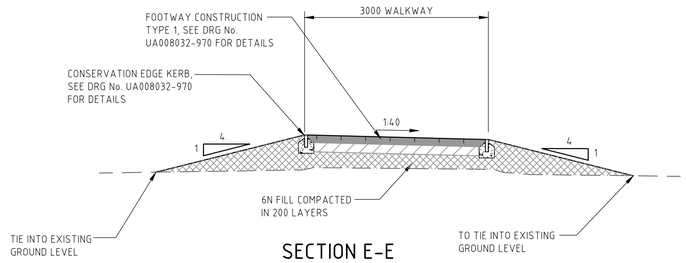

SECTION E-E
SCALE 1:50

Rev	Date	Description	Drawn	Checked	Approved
C01	26JUN18	ISSUED FOR CONSTRUCTION	PW	SAD	SAD
P02	07JUN18	SECTION F-F REVISED	PW	SAD	SAD
P01	24MAY18	FIRST ISSUE	PW	SAD	SAD

NOTES:

1. DO NOT SCALE FROM DRAWING.
2. ALL DIMENSIONS ARE IN MILLIMETRES UNLESS OTHERWISE STATED.
3. ALL SETTING OUT, LEVELS AND DIMENSIONS TO BE AGREED ON SITE.
4. THE DIMENSIONS OF ALL MATERIALS TO BE CHECKED ON SITE BEFORE LAID OUT.
5. ORDER OF CONSTRUCTION AND SETTING OUT TO BE AGREED ON SITE.

Client
LLYWODRAETH CYMRU
WELSH GOVERNMENT

Llywodraeth Cymru
Welsh Government

FOR CONSTRUCTION

Designed	P. WILLIAMS	Date 09 MAR 18	Signed
Drawn	P. WILLIAMS	Date 09 MAR 18	Signed
Checked	SA. DAVIES	Date 09 MAR 18	Signed
Approved		Date	Signed
Scale:	1:50	Datum:	-
Original Size:	A1	Grid:	OS
Suitability Code:	Sx	Project Number:	UA008032

PROJECT:
SA1 SWANSEA WATERFRONT

TITLE:
RIVERSIDE WALKWAY
SECTIONS AND DETAILS
SHEET 2 OF 2

ARCADIS Design & Consultancy for natural and built assets
Coordinating office:
Arcadis Cymru House
Fortran Road, St Mellons
Cardiff, CF3 0EY
Tel: 44 (0)29 2092 6700
www.arcadis.com

968-UA008032-57 | C01