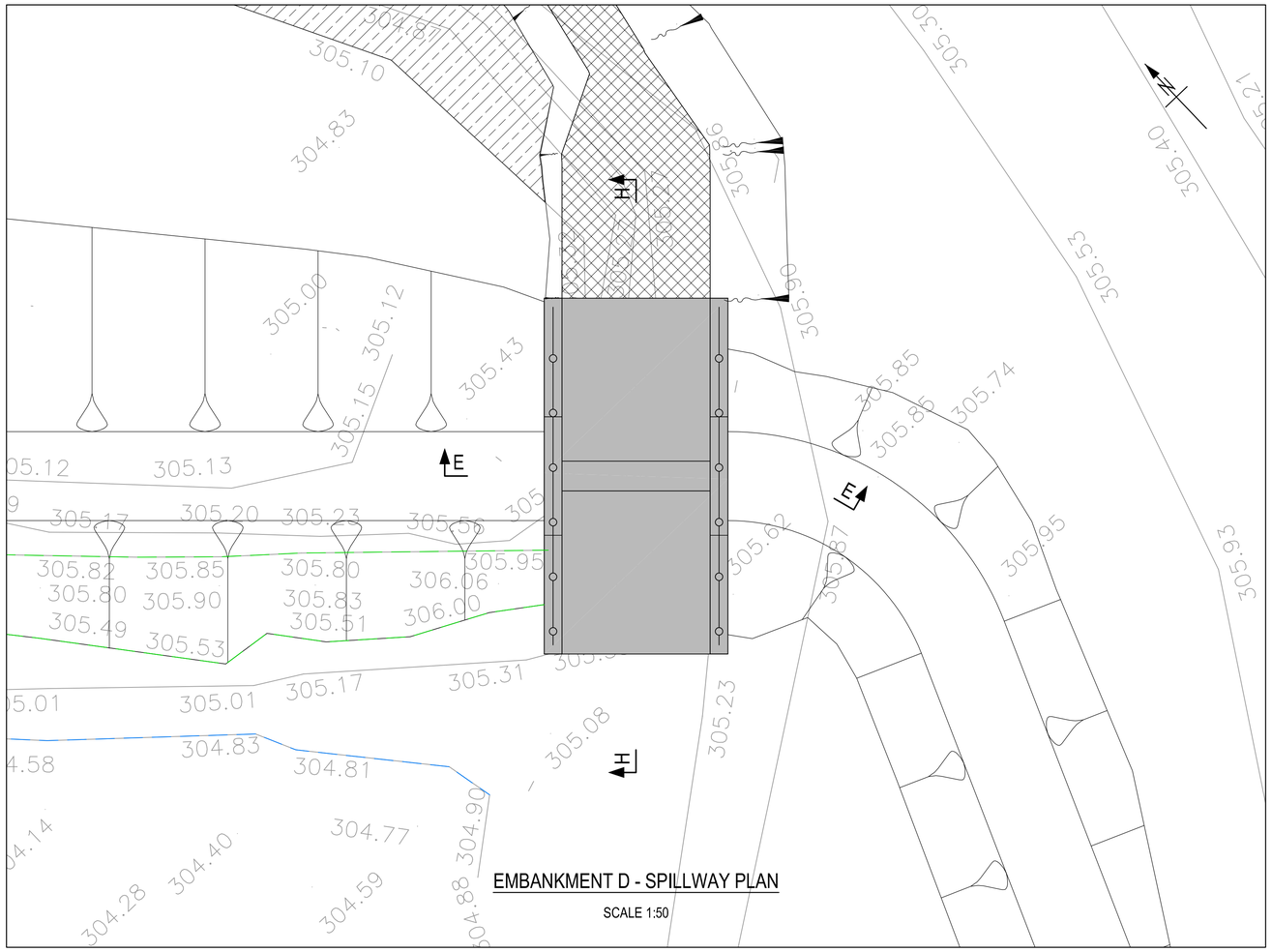

EMBANKMENT D - SPILLWAY PLAN

SCALE 1:50

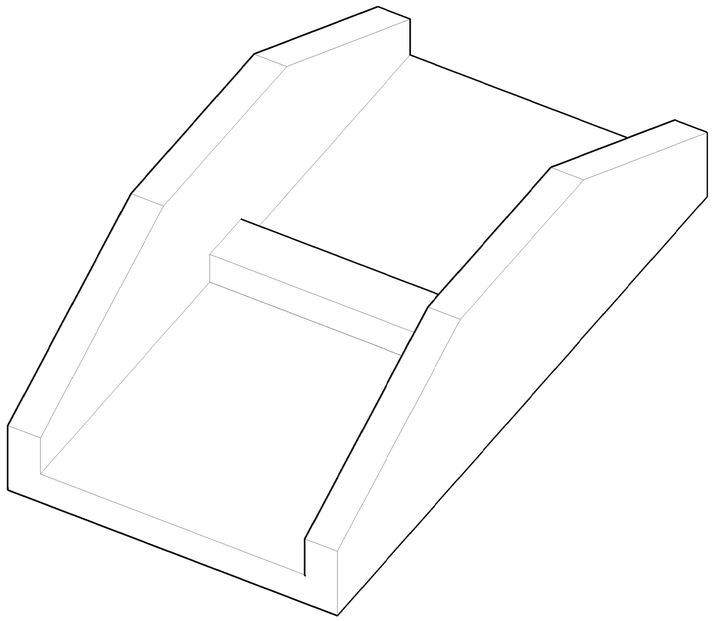

SPILLWAY - 3D PROJECTION

NTS

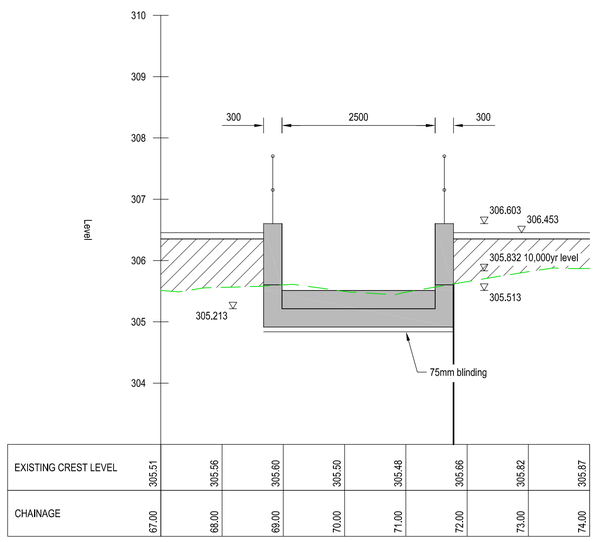

EXISTING CREST LEVEL	305.51	305.56	305.60	305.50	305.48	305.66	305.82	305.87
CHAINAGE	67.00	68.00	69.00	70.00	71.00	72.00	73.00	74.00

EMBANKMENT D - LONG-SECTION EE (SPILLWAY DETAIL)
SCALE: H 1:50,V 1:50. DATUM: 303.000

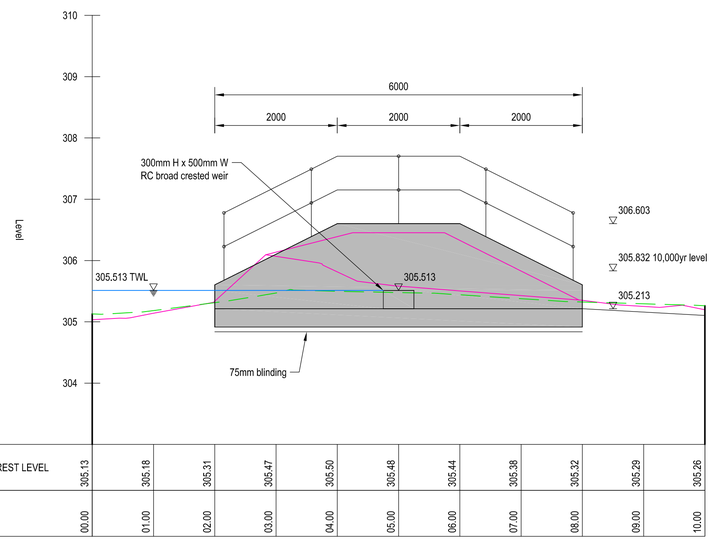

EXISTING CREST LEVEL	305.13	305.18	305.31	305.47	305.50	305.48	305.44	305.38	305.32	305.29	305.26
CHAINAGE	00.00	01.00	02.00	03.00	04.00	05.00	06.00	07.00	08.00	09.00	10.00

EMBANKMENT D - SECTION HH
SCALE: H 1:50,V 1:50. DATUM: 303.000

© Copyright Binnies UK Limited 2021

1m 0m 1m 2m 3m
Scale 1:50

Note: The limits, including the height and depths of the Works, shown in this drawing are not to be taken as limiting the obligations of the contractor under Contract.

Notes

1. All dimensions in millimetres unless stated otherwise.
2. All levels in metres above Ordnance Datum (m OD) unless stated otherwise.

Legend

- Existing crest/ground
- Existing upstream toe
- Existing/new embankment profile behind section
- Imported cohesive fill
- Concrete
- 1m wide outlet channel
- Existing outlet channel infill

References

123242-BUK-ZZ-00-DR-C-00030 EMBANKMENT D - GENERAL ARRANGEMENT & LONG-SECTION

Safety, Health and Environmental information
In addition to the hazards or risks normally associated with the types of work detailed on this drawing, the following significant residual risks should be noted. Further details are included in the CDM Design Risk Management Register.
Construction:
S.1 Reservoir is a statutory reservoir under the Reservoirs Act 1975. S.2 Historic mine works known to be present throughout the Gwydyr Forest and around the site location. S.3 Unchartered services - existing third party abstraction pipework and electricity supply located within the area downstream of the north-eastern embankment (Embankment D). S.4 Risk of inclement weather with absent prior warning. S.5 Existing embankment dam fill may be unstable when disturbed.
Maintenance, cleaning and operation:
S.2 Historic mine works known to be present throughout the Gwydyr Forest and around the site location. S.4 Risk of inclement weather with absent prior warning.
Decommissioning or demolition:
Risks are likely to be similar to the construction stage but should be reconsidered in advance of decommissioning, demolition, future refurbishment or replacement.

FOR PREVIOUS VERSIONS OF THIS FILE SEE 123242-BVL-Z0-00-DR-C-00032

Rev	Drawn	Chkd	Rvwd	Apprvd	Date	Description
P01	SPJ	LJM	SPC	SPC	20/01/21	For Client comment and review
P02	SPJ	LJM	SPC	SPC	18/02/21	Outline Design

Designed by: Date:

Status
S4 Suitable for stage approval

Client
Cyfoeth Naturiol Cymru Natural Resources Wales

Client Drawing No. Revision

Binnies UK Limited
60 High Street, Redhill, Surrey, RH1 1SH. United Kingdom
Tel: +44(0)1737 774155

Project
PEN-Y-GWAITH
RESERVOIR IMPROVEMENTS

Drawing title
EMBANKMENT D
SPILLWAY
PLAN & SECTIONS

Drawing scale: AS SHOWN Sheet size: A1

Drawing no. 123242-BUK-ZZ-00-DR-C-00032 Revision P02