Drawing Number
162906-CGE-WLS-DJP-DRG-ECV-000011 B01

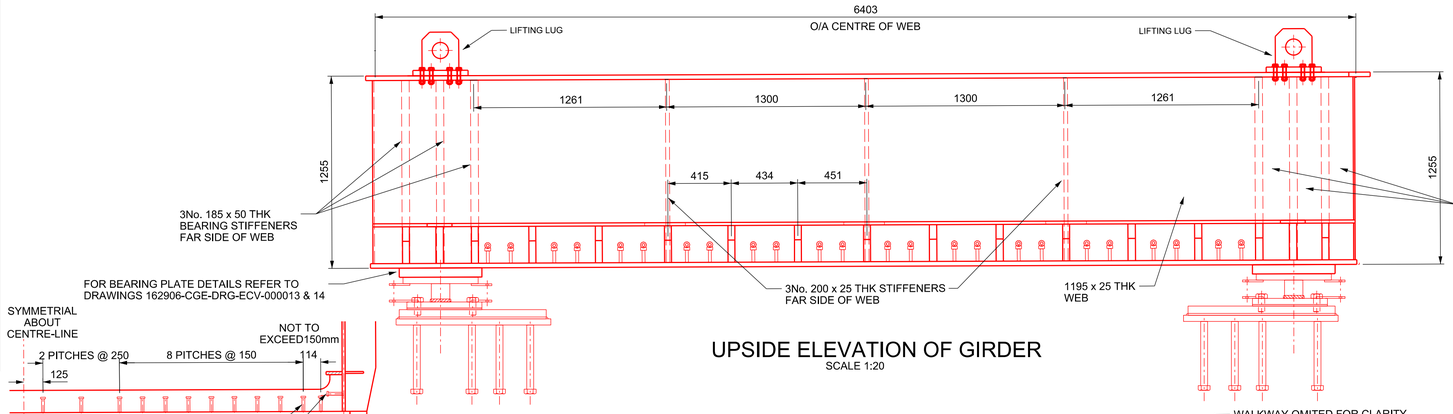

UPSIDE ELEVATION OF GIRDER
SCALE 1:20

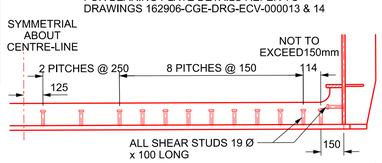

TYPICAL STEAR STUD ARRANGEMENT
SCALE 1:20

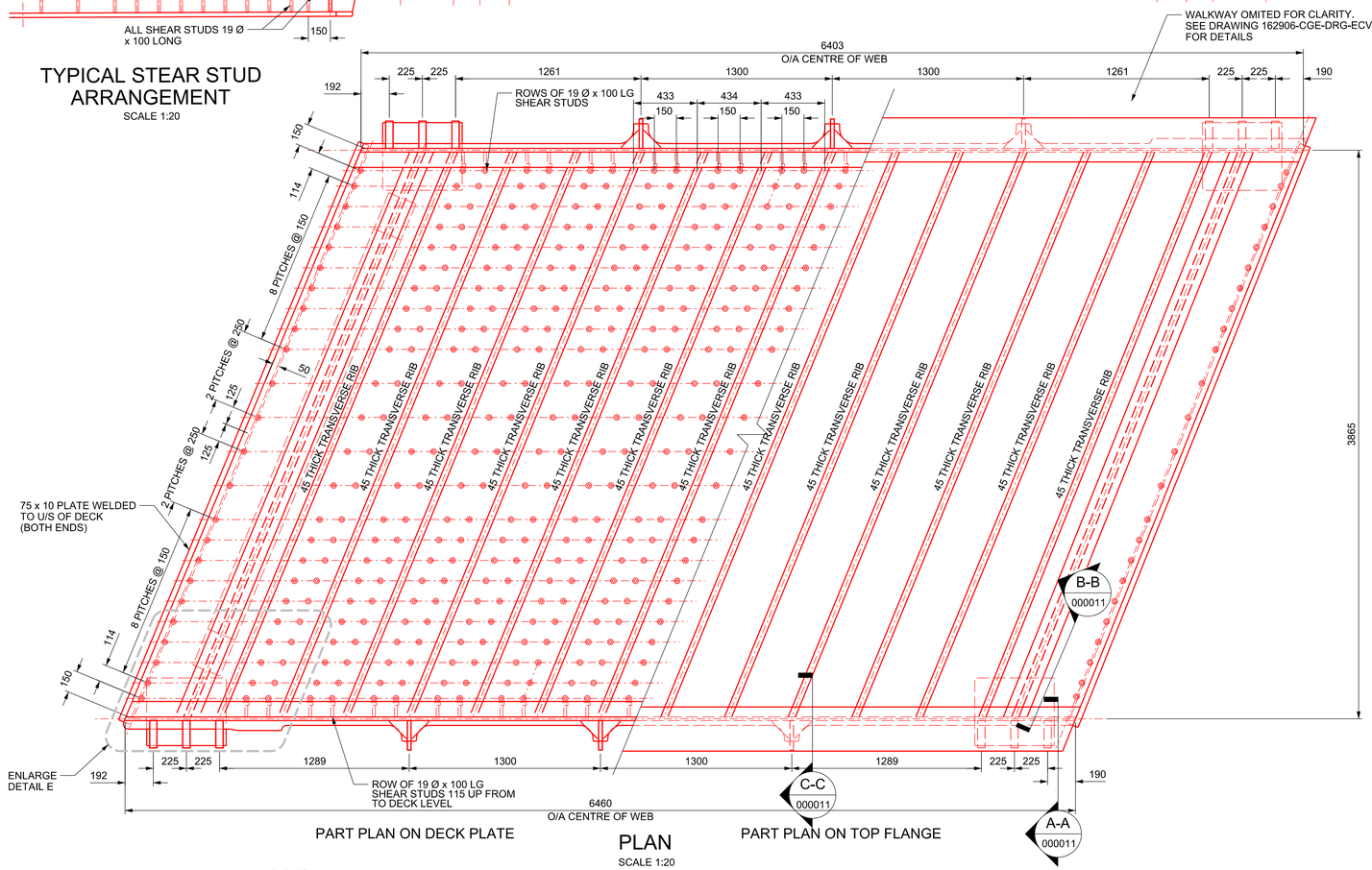

PART PLAN ON DECK PLATE

PLAN
SCALE 1:20

PART PLAN ON TOP FLANGE

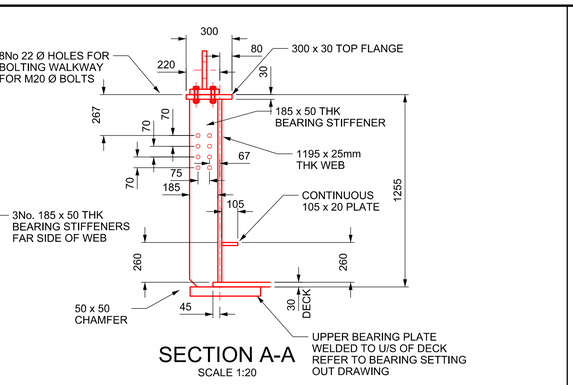

SECTION A-A
SCALE 1:20

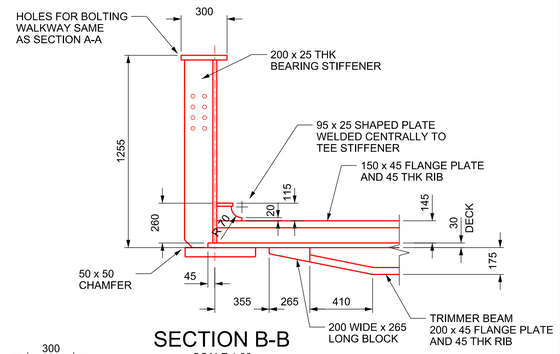

SECTION B-B
SCALE 1:20

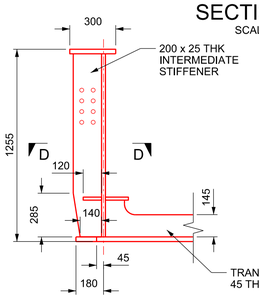

SECTION C-C
SCALE 1:20

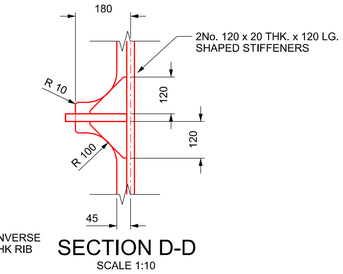

SECTION D-D
SCALE 1:10

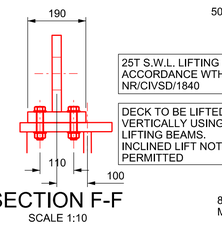

SECTION F-F
SCALE 1:10

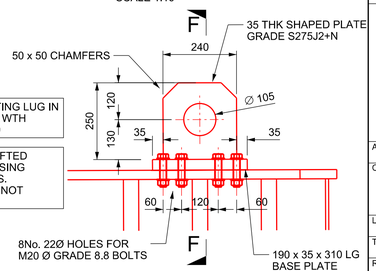

LIFTING LUG DETAIL
SWL OF LUG 25T
SCALE 1:10

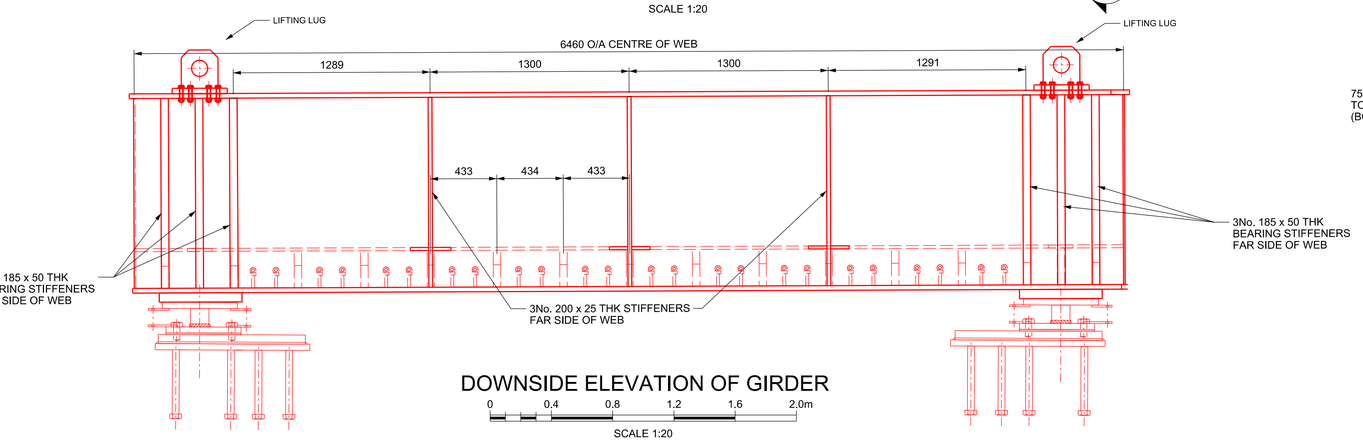

DOWNSIDE ELEVATION OF GIRDER
0 0.4 0.8 1.2 1.6 2.0m
SCALE 1:20

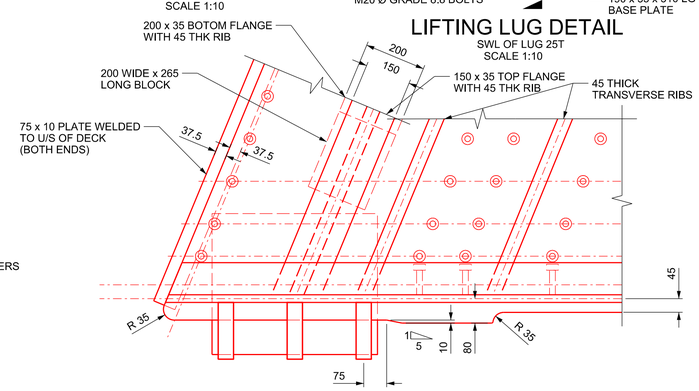

OBTUSE CORNER OF DECK DETAIL E
0 200 400 600 800 1000mm
SCALE 1:10

Legend/Notes

1. FOR GENERAL NOTES REFER TO NOTES DRAWING :- 16906-CGE-DRG-ECV-000001.
2. THESE DETAILS ARE PRODUCED WITH REFER TO NETWORK RAIL DRAWINGS NR/CIV/SD/1324, 1325 & 1332

SAFETY, HEALTH AND ENVIRONMENTAL INFORMATION

NOTES BELOW ARE ADDITIONAL TO HAZARDS/RISK NORNALLY ASSOCIATED WITH THIS TYPE OF WORK

CONSTRUCTION
CI. STEEL DECK & CILL BEAMS LIFTING DURING CONSTRUCTION WORKS
CII. ABUTMENT INSTABILITY DUE TO REFURBISHMENT WORKS ON THE ABUTMENT/WING WALLS
CIII. EXCAVATION/SLOPE COLLAPSE
CIV. UNDERMINING EXISTING ABUTMENT FOUNDATION
CV. STABILITY OF THE 'L' SHAPE RETENTION UNITS
CVI. UNFORESEEN GROUND CONDITIONS

OPERATIONAL & MAINTENANCE
OI. DISTURBING THE TRACK DURING WORKS
OII. WORKING AT HEIGHT, RISK OF PERSONNEL FALLING
OIII. PERSONAL INJURY TO WORKERS DUE TO CONTACT WITH TRAINS
OIV. SLIP/TRIP/FALLS DUE TO UNEVEN OR STEEP GROUND
OV. DISTURBANCE TO LOCAL AREA AND ENVIRONMENT
OVI. CONTAMINATION TO ENVIRONMENT AND SPECIES
OVII. INJURY OR INFECTION DUE TO CONTACT TO HAZARDOUS MATERIAL
OVIII. DAMAGE TO SERVICE CABLES LAID ALONG THE BALLAST
OIX. PERSONAL INJURY DUE TO WORKING NEAR/ABOVE WATER
OX. BRIDGE/SCAFFOLD IMPACTED BY LARGE OBJECT DURING FLOODING EVENTS
OXI. ABUTMENT INSTABILITY DURING CONSTRUCTION WORKS
OXII. STABILITY FAILURE OF THE 'L' SHAPE RETENTION UNITS

DISMANTLING/DEMOLITION
DI. OVERTURNING OF ABUTMENT AFTER EXISTING DECK HAS BEEN REMOVED

THESE NOTES ARE BASED ON THE USE OF EXPERIENCED AND COMPETENT CONTRACTORS CARRYING OUT THE WORK USING AN APPROVED SAFE METHOD OF WORKING. A RESIDUAL RISK AND HAZARD DOCUMENT HAS BEEN CREAT FOR A MORE DETAILED ASSESSMENT.

Rev	Date	Description of Revisions	Drawn	Chkd	Appr
B01	19/05/21	First Issue	MM	MG	SAG
P01.1	14/05/21	First Issue	MM	MG	SAG

Status: Fit for Internal Review & Comment
Suitability: S3

NetworkRail

Authorised | Signed | Date

Contractor(s): CENTREGREAT RAIL

Location: ABERDOVEY, WALES, LL35 ORG

Type: CAD Drawing | Sub-type:

Role: Civil Engineer | Sub-Role: Structures and Buildings

Zone: Wales Region

Phasing | Grip Stage: 5

Region: Western and Wales

Contract No.: 162906

Contract Title: Pant Eidal Bridge

Drawing Title: PROPOSED GENERAL ARRANGEMENT DECK STEELWOK DETAILS

Designed	M. GOPAL	Signed Electronically Signed	Date 29/03/21
Drawn	M. MITCHELL	Signed Electronically Signed	Date 29/03/21
Checked	M. GOPAL	Signed	Date 15/05/21
Approved	S. ALARCON GENER	Signed	Date 15/05/21

Scale(s): 1:20 & 1:10
ELR & Mileage: 81m 31.75ch to 0

Alternative Reference: 162906-CGE-DRG-ECV-000011
Sheet of

Drawing Number: 162906-CGE-WLS-DJP-DRG-ECV-000011
Revision: B01

Sheet Size A1 594 x 841