ORIGINAL SIZE A1

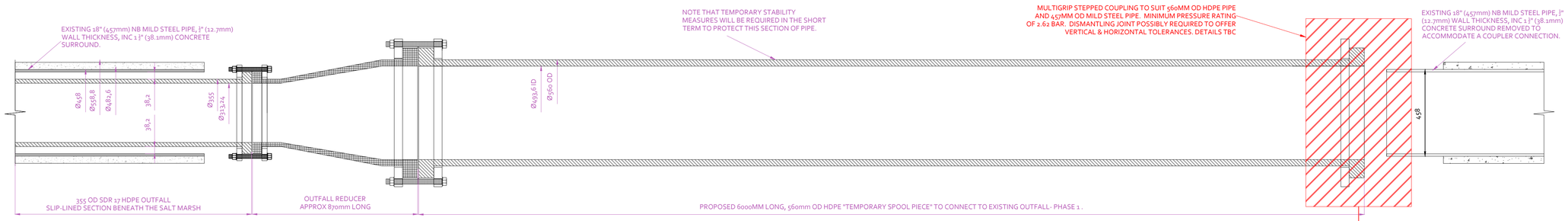

560mm OD HDPE "TEMPORARY SPOOL PIECE" TO CONNECT TO EXISTING OUTFALL- PHASE 1 .

CONNECTION DETAIL

SIDE ELEVATION

SIDE A

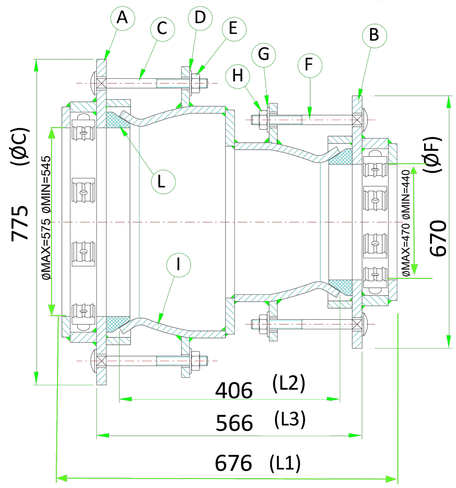

SIDE B

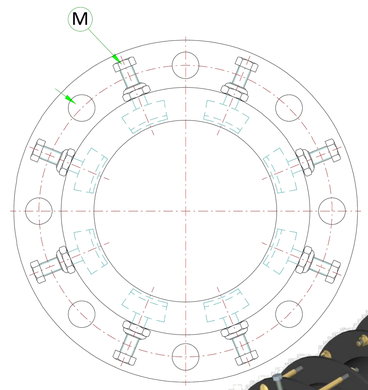

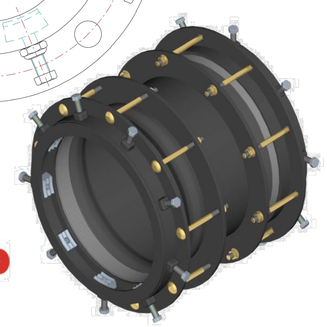

Rilsan Rivestimento Coating Revetement Beschichtung

MULTIGRIP

MULTIGRIP	30-D10E-575-470	
DESIGN DATA		
PRODUCT CODE	MGR30-D10E-575-470	
PRODUCT TYPE	MULTIGRIP	
MAX OUTSIDE PIPE DIAMETER SIDE A(ØMAX)	MM	575
MIN OUTSIDE PIPE DIAMETER SIDE A(ØMIN)	MM	545
MAX OUTSIDE PIPE DIAMETER SIDE B(ØMAX)	MM	470
MIN OUTSIDE PIPE DIAMETER SIDE B(ØMIN)	MM	440
FLUID	WATER	
MAX OPERATING PRESSURE	BAR	10
OPERATING TEMPERATURE RANGE	°C	1-55
NOMINAL PRESSURE	BAR	10
TEST PRESSURE	BAR	15
DIMENSIONAL DATA		
MAXIMUM LENGTH(L1)	MM	676
MAX DISTANCE BETWEEN FLANGES (L3)	MM	566
BODY LENGTH (L2)	MM	406
FLANGE OUTSIDE DIAMETER SIDE A (ØC)	MM	775
FLANGE OUTSIDE DIAMETER SIDE B (ØF)	MM	670
ESTIMATED WEIGTH	KG	210
OTHER		

COMPONENT	DESCRIPTION	Q.TY	MATERIAL/STANDARD	COATING/REMARKS
A-B	COMPRESSION FOLLOWER(+FIXED FLANGE):1 PER SIDE	2	CARBON STEEL	RILSAN NYLON 11 BLACK
C/D/E-F/G/H	COMPRESSION FOLLOWER BOLTS(+NUTS+WASHERS):14 X M20 PER SIDE A+12X M20 PER SIDE B	26	8.8-EN ISO 4014/4033	ANTICORROSION
I	MAIN FITTING BODY	1	CARBON STEEL	RILSAN NYLON 11 BLACK
L	TOROIDAL SEALING GASKET :1 PER SIDE	2	EPDM/BS EN 681	EXTRUDED
M	END RESTRAINING GRIPPERS:14 PER SIDE A AND 12 PER SIDE B	26	C40	ANTICORROSION

Coupling tolerance range				Max distance between pipes			
SIDE A: ØMAX	575 MM	SIDE B: ØMAX	470 MM	G	350	MM	
SIDE A: ØMIN	545 MM	SIDE B: ØMIN	440 MM	G	270	MM	

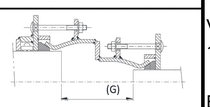

1) "MULTISIZE" - "LARGESIZE" SERIES COUPLINGS GUARANTEE THE MAXIMUM HYDRAULIC SEAL BUT DO NOT RESTRAIN AXIAL PIPE MOVEMENT (PLEASE REFER TO THE SERIES PIPE-LOCKING OR "MULTIGRIP")

Nova Siria s.r.l. SINCE 1932 ...we know how

Technical Office
Via Marconi 4/6,
10060 ROLETTO (TO)-ITALY

E-MAIL: tecnico@novasiria.it

LANG.	EN
U.M	M
ED.N°	1
REV. N°	19
DATE	17/02/2022
ISSUED BY:	
DATE	23/03/2022

NOTES;

ALL DIMENSIONS ARE IN mm. ALL LEVELS ARE IN mAOD UNLESS NOTED OTHERWISE.

PIPE MATERIALS TO BE PE100, SDR 17 (FOR BOTH THE 560MMØ OD & 355Ø OD.

NOTE THAT TEMPORARY STABILITY MEASURES WILL BE REQUIRED IN THE SHORT TERM BETWEEN PHASES.

Rev	Date	By	Rev Description

Drawing Status:
Outline Design Detail

Client:
EASTMAN

Project Reference:
EASTMAN; NEWPORT OUTFALL

Drawing Title:
PHASE 1 - SEAWARD CONNECTION DETAIL TO EXISTING OUTFALL.

Drawing Reference:
1001-09 - P1 SEAWARD CONNECTION TO EXISTING OUTFALL

Issue Date: 23/03/22
Scale: DO NOT SCALE

KAYMAC Marine & Civil Engineering Ltd

Head Office & Accounts
Osprey Business Park
Byng Street, Landore,
Swansea, SA1 2NR
Tel: (01792) 301818
Fax: (01792) 645698

Bristol Office
St. Andrews House
St. Andrews Road
Avonmouth
Bristol BS11 9DQ
Tel: (01179) 382603

Email: enquiries@kaymacltd.co.uk
Website: www.kaymacmarine.co.uk