Proposed Anaerobic Digestion Facility
Crugmore Farm
Penparc
Cardigan
SA43 1RD

Environmental Noise Assessment
3109/ENA2_rev1

25th July 2013

For : Syrus Energy Ltd
Cardiff
CF10 4LN

Hunter ACOUSTICS
Henstaff Court Business Centre
Llantrisant Road, Pontyclun
Cardiff CF72 8NG

Tel: 029 20891020
Fax: 029 20891870
www.hunteracoustics.co.uk

Hunter Acoustics is the trading name of Hunter Acoustics Ltd
Registered Office : Henstaff Court Business Centre, Llantrisant Road, Cardiff CF72 8NG
Registered Number : 4587925

1.0 Introduction

A new enclosed Anaerobic Digestion (AD) Facility is proposed at Crugmore Farm, Penparc, Cardigan, SA43 1RD. Hunter Acoustics has been commissioned to assess the existing noise climate at the closest residential receivers.

Three monitoring locations representing background noise conditions of the closest residential receivers have been agreed with the local authority and these are shown on Site Plans 3109/SP1 & 2. Daytime ambient and background noise is controlled by agricultural activities and distant road traffic noise from the A487. There is very little road traffic noise or other activities during the night. The surrounding area is open fields.

Measured background noise levels would be used as basis for setting prospective environmental noise limits in line with Ceredigion County Council's planning condition requirements.

This report details the Crugmore AD site environmental noise limits set at the residential receiver locations around the proposed site. It goes on to predict preliminary plant noise emissions to the agreed residential receivers for comparison with the environmental noise limits.

The noise model is based on initial data received to date. It is intended to develop the noise model as plant selections are finalised during the detailed design stage.

Implications for the design are discussed in order that environmental noise criteria are met. An acoustic specification review of the main AD Process building structure is also included as well as an initial noise impact assessment of proposed vehicular access.

Acoustic Terminology is given in Appendix A.

2.0 Planning Guidance

We understand at this outline stage that no planning conditions relating to noise have been issued by the local authority.

Local authorities often make reference to BS4142:1997 which assesses likelihood of complaints of new industrial developments near residential dwellings:

2.1 BS4142: 1997 Method for rating industrial noise affecting mixed residential and industrial areas

This standard describes a rating method comparing L_{Aeq} noise levels from the industrial source with pre-existing background L_{A90} levels at the residential receiver. It advises at a difference (industrial noise - background) of:

- +10dB or higher, *complaints are likely*;
- -10dB or lower - *complaints are unlikely*;
- A difference of +5dB is of *marginal significance*.

A +5dB penalty is applied to the industrial noise level if it exhibits a distinguishable discrete continuous note (whine, hiss, screech, hum, etc.), distinct impulses (bangs, clicks, clatters or thumps), or the noise is irregular enough to attract attention.

BS4142 advises it should not be used when background noise levels are 'very low' and goes on to define 'very low' as <30dB(A)L_{90}.

3.0 Noise Survey

3.1 Noise Sensitive Properties (NSPs)

In order to set environmental noise limits it is first necessary to define the existing ambient and background noise climate at the agreed residential receivers.

The nearest noise sensitive properties are shown on site plan 3109/SP1:

3109/SP1 Site Plan showing NSPs



Crugmore Bungalow, Crugmore Cottage and Tir y Dail – residential properties directly to the north-east of the development site.

Cwm March, Ger y Rhos and Rhosllyn – residential properties further to the east of the development site.

Cwrt Farm, Wellewen and Bryn Garw – residential properties to the south/south-east of the development site.

Warren Farm – farm to the north of the development site, off the A487.

Myrtle Hill Cottages, Willowdene, Rhoswerdd, Glantegfan – residential properties to the west of the development site off the A487.

An environmental noise survey has therefore been carried out to confirm baseline noise values.

3.2 Continuous Monitoring

Continuous monitoring was carried out at the agreed locations between the 7th and 10th June 2013 to monitor weekday and weekend noise levels. The parameters logged included L_{Aeq} and L_{A90}. The following measurement positions were used, shown on Site Plan 3109/SP2 below:

2574/SP2 Site Plan showing monitoring positions



Position 1: A position in a field adjacent to Crugmore Cottage – approximately 250m to the North-East of proposed development site. Representative of background noise levels at properties to the north and east (Crugmore Bungalow, Crugmore Cottage, Tir y Dail, Cwm March, Ger-y-Rhos, Rhosllyn).

Measurement position is 1.5m above ground level.

Position 2: A position in a field adjacent to Cwrt Farm – approximately 500m to the South-East of the proposed development site. Representative of background noise levels at properties to the south-east (Cwrt Farm, Bryn Garw, Wellewen)

Measurement position is 1.5m above ground level.

Position 3: A position in a field off the A487– approximately 300m to the North-West of the proposed development site. Representative of background noise levels at properties to the north-west (Warren Farm, Myrtle Hill Cottages, Willowdene, Rhoswerdd, Glantegfan)

Measurement position is 1.5m above ground level.

The following equipment was used:

Rion NL-32 Precision Sound Level Meter (Type 1) – Position 1
Larson Davis 820 Precision Sound Level Meter (Type 1) – Position 2
Larson Davis 824 Precision Sound Level Meter (Type 1) – Position 3
Norsonic Acoustic Calibrator Type 1251
Windshields

Weather conditions were dry with negligible wind throughout the survey period. The measurement systems were calibrated before and after the survey, no variation occurred.

Results of continuous monitoring at positions 1-3 are shown in Time History Graphs 3109/TH1-3 respectively.

3109/TH1 Time History – Position 1

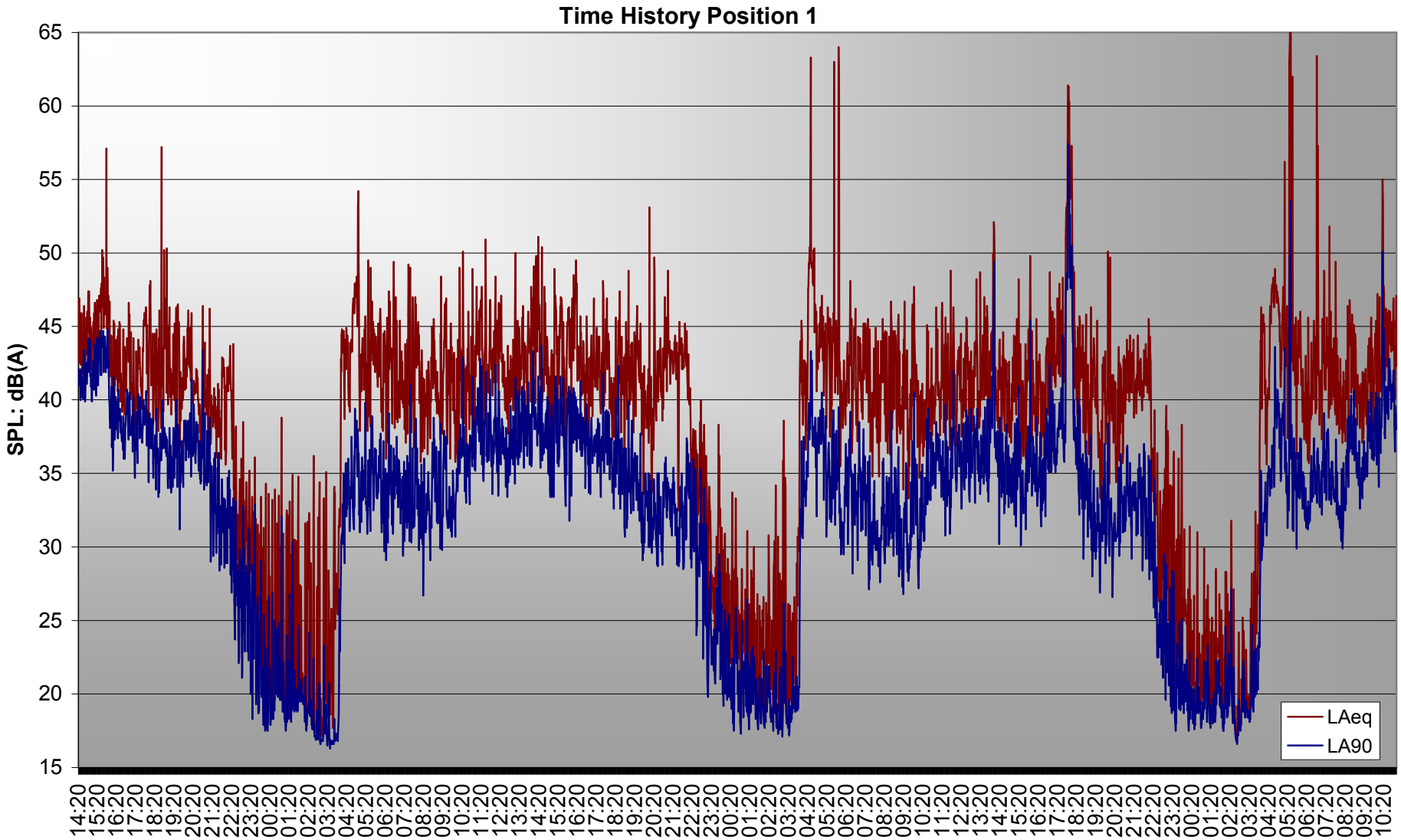

3109/TH2 Time History – Position 2

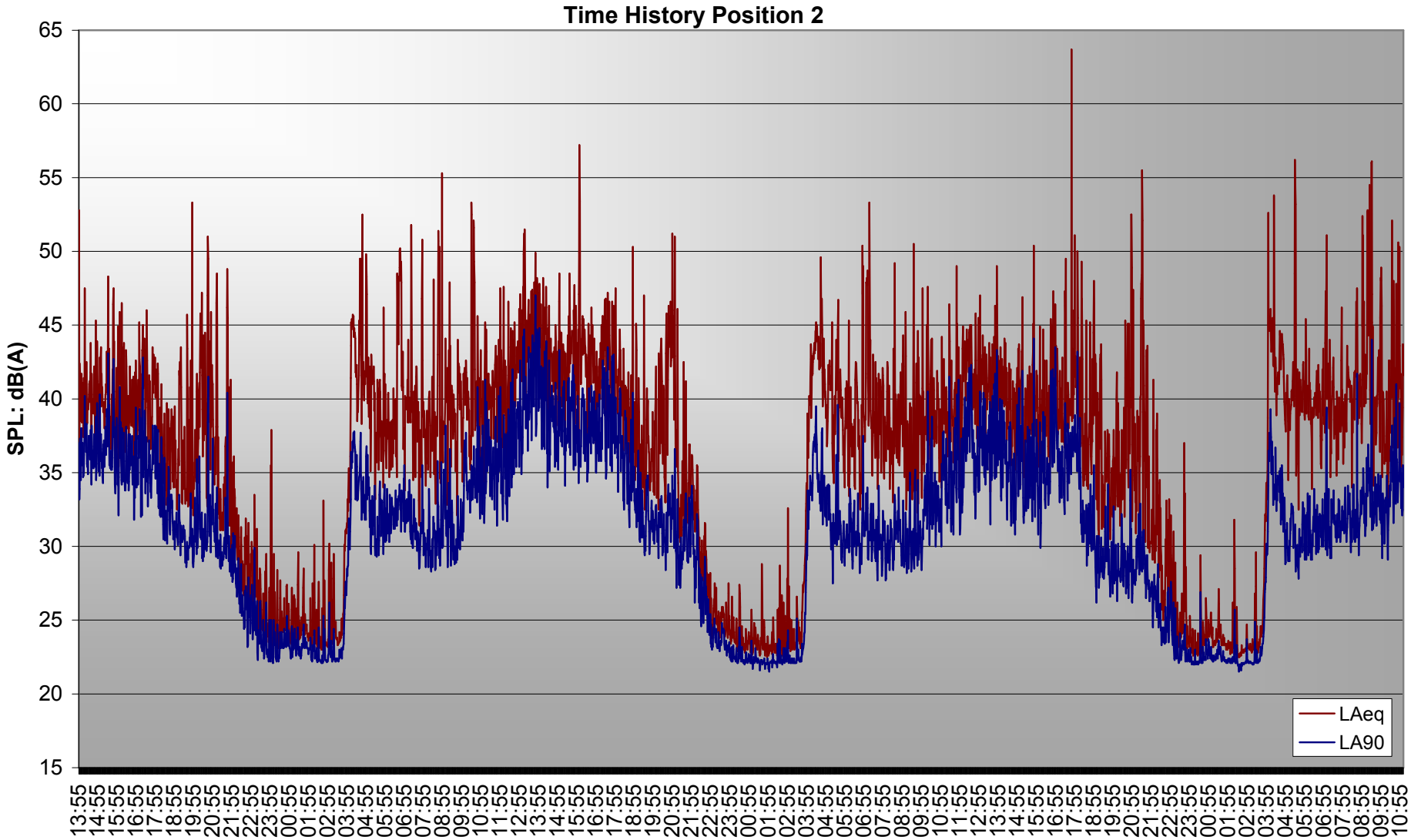

3109/TH2 Time History – Position 3

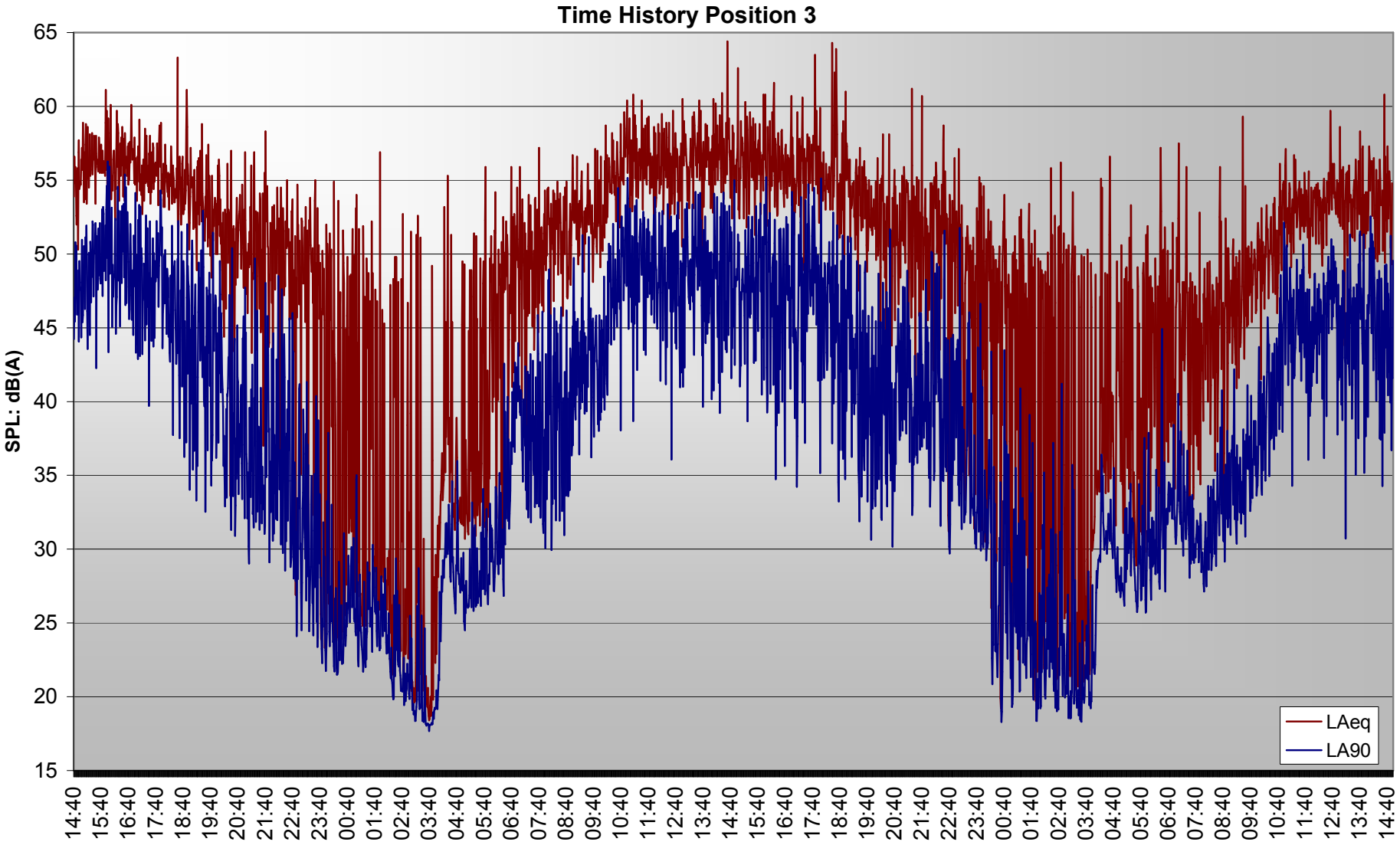

A summary of typical daytime extended day and night-time background levels measured is given below

Position	Noise: L_{A90}		
	Daytime [Typical Operating] (0800-1800hrs)	Daytime [Extended] (0700-2300hrs)	Night-time (2300-0700hrs)
Position 1	33dB	32dB	20dB
Position 2	31dB	29dB	22dB
Position 3	36dB	34dB	22dB

4.0 Environmental Noise Criteria

It is normal to apply an environmental noise limit based on BS4142 such that the plant rating level does not exceed a level 5dB higher than the otherwise prevailing background L_{90} noise level. (With the 5dB penalty applied for tonality, this effectively means designing plant noise emissions to the otherwise prevailing typical background).

However, BS4142 advises it should not be used when background noise levels are 'very low' and goes on to define 'very low' as <30dB(A)L_{90}. We would therefore propose a 30dB(A)$L_{eq,5min}$ lower plant noise limit.

This should ensure overall daytime and evening ambient noise levels are not significantly increased. At night noise levels within bedrooms at the closest residences would be 15-20dB(A) – taking a 15dB loss through a partially open window – well below 30dB(A) sleep disturbance standard quoted in The World Health Organisation (WHO) 'Guidelines for Community Noise – 1999'.

The following criteria are therefore proposed in order to reasonably protect critical residences without imposing restrictive noise control burdens on the applicant.

Receiver	Noise Limits		
	Daytime [Operating] (0800-1700hrs)	[Daytime Extended] (0700-2300hrs)	[Nighttime] (2300-0700hrs)
Crugmore Bungalow *Crugmore Cottage* *Tir y Dail* *Cwm March* *Ger y Rhos* *Rhosllyn*	33dB$L_{Aeq,1hr}$	30dB$L_{Aeq,1hr}$	30dB$L_{Aeq,5min}$
Warren Farm *Myrtle Hill Cottages* *Willowdene* *Rhoswerdd* *Glantegfan*	36dB$L_{Aeq,1hr}$	34dB$L_{Aeq,1hr}$	30dB$L_{Aeq,5min}$
Cwrt Farm *Wellewen* *Bryn Garw*	31dB$L_{Aeq,1hr}$	30dB$L_{Aeq,1hr}$	30dB$L_{Aeq,5min}$

These limits shall be confirmed acceptable by the Local EHO/planners prior to the design progressing.

5.0 Preliminary AD Facility Noise Assessment

The following discusses a preliminary noise assessment based on plant data received to date. It is intended to develop the noise model as t plant selections are finalised during the detailed design stage. Plant information needs to be confirmed by manufacturers and/or a similar site visited to carry out source noise measurements for each activity.

We have been advised the following activities will take place on site. Please confirm running times of each item of plant.

Reception Building - Internal Building Activities

- Please confirm internal plant including pumps
- Please confirm no of compact telehandlers
- Feedstock delivery and unloading activities, from 23T Refuse Collection Vehicles (RCVs), Tractor and Tanker, 7.5T box trucks.

Please confirm hours that waste intake activities take place:

AD Tank Plant

Buffer Storage Tank

- Please confirm pump plant

Central Pump Control Room – TBA

Digestate Storage Tank, Primary & Secondary Digester Tanks

- Please confirm number of mixers per tank – our preliminary model allows for 2no per tank.

External Plant/ Activities

- Pasteurisation Units (number and running times TBA)
- Separator + Feeding Screw Pump (confirm running times)
- Bio-Filter (runs continuously)
- Delivery and despatch HGV visits, or tractor and trailer for local compost deliveries (Monday-Friday 0730-1800hrs; Saturday 0800-1400hrs) - Up to:
    - 20no Tractor & Trailer movements per day
    - 12no 7.5T box trucks movements per day
    - 6no 23T Refuse Collection Vehicle movements per day
    - 2no 25T articulated tanker movements per day
- Combined Heat & Power (CHP) Unit + Transformer (runs continuously). Please confirm any associated CHP plant e.g. Carbon Filter, Gas Drier, Gas Booster.
- Flare Stack (emergency only)

5.1 Source Plant Noise Data

The following preliminary data has been received of noise measurements carried out at for a similar AD development:

Plant / Machinery Item	Measured Freefield Noise Level (dB)	Measurement Distance (m)
Separator Feeding Screw Pump	73.0	1
Separator	70.0	1
Heating System Pump	35.0	1
Exhaust Stack	70.5[1]	1
Generator Building	78.1	0.5
Digester Loading Pump	71.8[1]	1
Gas Mixer	70.9[1]	0.5
Gas Mixer	70.9[1]	0.5
Hydraulic Pumps	74.3[1]	0.5
Mixing pit pump	70.2	0.5
Quick mix pump	72.2[1]	1

1 Corrected noise level -3dB due to reverberant conditions

Bio-filter fan and transformer noise levels TBA – the following values have been assumed for our preliminary noise model, based on database figures:

Bio-filter: 68dB(A) @10m

Transformer: 75dB(A) @10m

It is intended to visit a similar site to confirm AD plant source noise levels, where manufacturer's data is not available.

Typical HGV noise data is taken from Appendix C BS5228: Parts 1 & 2 2009 'Code of Practice for assessing noise and vibration on construction and open sites' and from the Hunter Acoustics database.

5.2 Drawing

Our analysis has been based on *Bay Engineering* drawing:

6685 100 General Arrangement 20/06/2013

The preliminary general arrangement drawing does not show all plant locations. Please forward proposed plant layout drawing for review.

5.3 Sound Propagation Model

Our analysis has used the proprietary Noisemap Five (5.0.17) edition computer modelling package, in conjunction with procedures of;

BS5228: Parts 1 & 2 2009 'Code of Practice for assessing noise and vibration on construction and open sites'.

This model allows noise levels from major industrial sources to be predicted over large distances and varying terrain.

Attenuation is included accounting for distance, air absorption, ground absorption, and screening losses from site topography and local structures.

The preliminary analysis predicts initial resultant noise levels at the agreed residential receiver positions.

5.3.1 Preliminary Noise Map Analysis

Preliminary Noise Map 3109/NM1 attached shows a daytime (1hr) noise contour plot across the surrounding area to critical residences. The noise contour is plotted at 4m above ground level (1st floor bedroom window level).

3109/NM1 Daytime Noise Map at 4m above site ground level

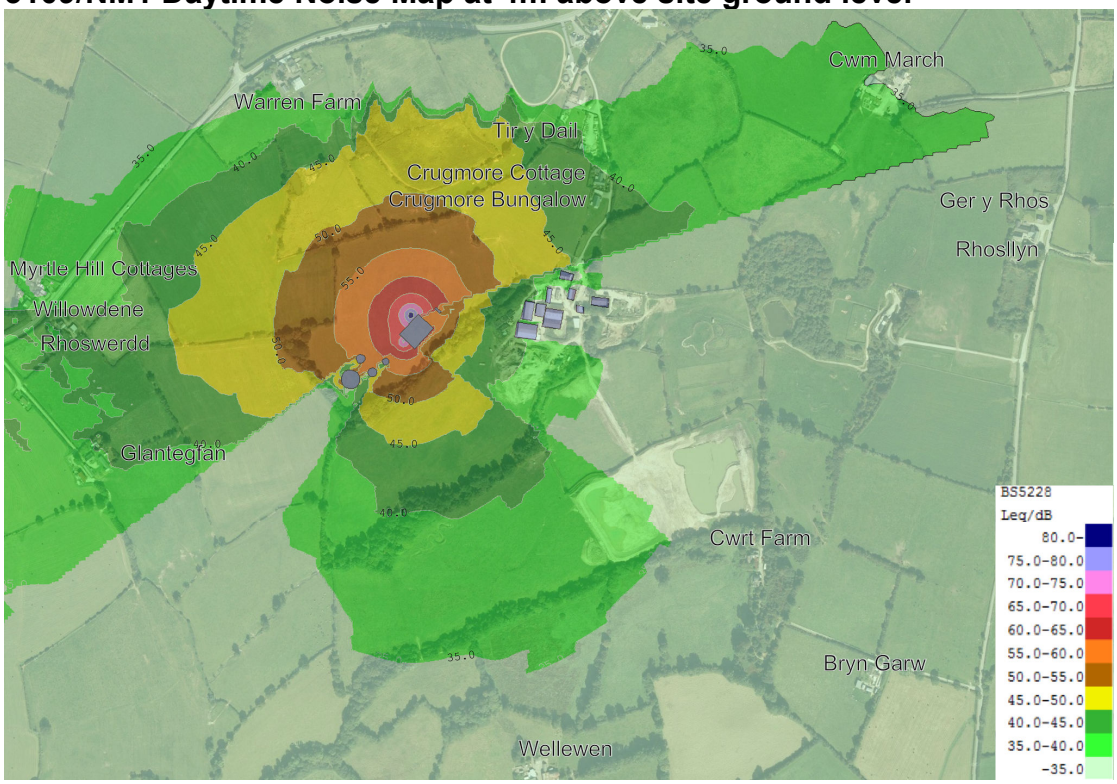

At this stage, our analysis includes attenuation/losses for the main reception building structures discussed in section 6.0 below.

Appendix C shows daytime noise emission calculations from the various plant elements in order of contribution to critical residential receivers. Initial sub-totals for fixed plant and haul road contributions are calculated and finally the total sound pressure level. Overall predicted sound pressure levels are summarised in Table 3109/T2, below;

Table 3109/T2	Sound Pressure Level: dB(A) Free Field				
Position	Predicted			Specification/Condition	
	Fixed Plant	HGVs	Total	Day	Night
Crugmore Bungalow	42	22	42	33	30
Warren Farm	33	8	33	36	30
Rhoswerd	41	12	41	36	30
Glantegfan	40	7	40	36	30
Wellewen	33	16	33	31	30
Cwrt Farm	26	16	26	31	30
Rhosllyn	26	2	26	33	30
Cwm March	33	7	33	33	30

Table 3109/T2 shows daytime noise levels from HGVs are indicated to be insignificant. Daytime noise levels are controlled by fixed plant at the site. With some plant details outstanding and running times to be confirmed Table 3109/T2 shows both daytime and night-time conditions – dominant plant runs during the critical night-time period as well as the day.

Initial predicted noise levels are indicated to exceed the daytime and night-time criteria at most positions. Noise levels are indicated to be controlled by the Station Transformer and Bio-filter Fan. Additional noise mitigation measures would be required.

5.4 Preliminary Noise Mitigation Options

At this stage, noise mitigation is indicated to be required to the closest critical receivers which may require at least 10dB additional attenuation on each item of the dominant plant.

With environmental noise criteria strict, we would recommend that in order to meet night-time noise limits all external plant shall be re-located indoors based on past experience:

Station Transformer

Station Transformer data yet to be received – we have based our assessment on a source figure quoted at a previous site. The noise model indicates this is currently the controlling noise source. We would require manufacturer's noise data or a site visit to confirm transformer source noise levels. If high transformer noise levels are confirmed, locating the transformer within a building may well be required.

Biofilter Fan

Biofilter fan data yet to be received. This is likely to require relocating indoors (into reception building?) based on past experience.

CHP

An initial CHP design limit of 55dB(A) @10m was quoted in our preliminary noise survey report (12/06/13). CHP noise data received indicate around 56dB(A) @10m.

Other External Plant (which runs night-time)

External plant (which runs during critical night-time period) would need to be reselected for significantly quieter plant, or located indoors.

5.5 Good Practice – Noise Control

Inevitably on most industrial sites, significant noise levels are generated in the immediate vicinity. Good site management practices and other specific measures would also provide additional noise mitigation. It is the duty of the contractor to use 'best practical means' to minimise noise levels. BS5228 'Noise Control on Construction and Open sites', Part 1 - Code of Practice for basic information and procedures for noise control gives guidance on 'best practical means'. The main issues for this site are listed below;

1) All equipment shall be properly maintained so no unnecessary noise is caused.
2) Doors should remain closed when noisy activities take place
3) All access roads would be kept clean and maintained in a good state of repair to avoid unwanted rattle and "body slap" from vehicles
4) Any reversing beepers fitted to any delivery/despatch HGVs should be minimised as far as is reasonably practicable and subject to maintaining site safety. This could involve muting / switching off reversing beepers and using a banksman; low beeper volume settings (if possible set to site ambient noise levels); and / or manoeuvring vehicles in a circular manner to avoid the use of reversing alarms.
5) Site layout should locate the noisiest stationary plant as far as is practicable from main access doors.
6) The operatives of the site should be made aware of noise control requirements.

NB: These good practice guidelines are solely for the purposes of this AD Facility application.

6.0 Preliminary Proposed Building Structures

Our preliminary analyses have been based on typical internal noise levels based on company database figures. It is essential that manufacturers data is received and/or a site is visited to confirm internal plant noise levels.

6.1 Reception Building

The preliminary model is based on a similar single skin side wall construction with up to dwarf concrete wall sections and single skin roof.

The following minimum sound reduction performance figures have been used for the proposed main reception building

Facade Element	Sound Reduction Index (dB, BSENISO140) @ Octave Band Centre Frequency (Hz)						
	63	125	250	500	1K	2K	4K
Walls/Roof	15	12	17	17	20	23	33
Door (0.9 x 2.1m^2)*	13	17	21	26	29	31	34

*The door supplier shall confirm their proposed systems meet the above performance. Based on our database figures a proprietary system should be available.

Doors/roller shutters should remain closed when offloading/delivering, waste grinding plant loading and telehandlers are operating. Deliveries should only take place during the agreed (daytime) hours of acceptance with any waste grinding plant and unloading activities only taking place once the doors have been shut, minimising the time doors are open in any given hour. Alternatively include an automatic lobbied door arrangement to avoid noise break-out via open access doors.

6.2 Tank Pumphouses, Plantrooms

Details of other pumphouses and plantrooms are yet to be received.

6.3 General

Any services penetrations through the external building fabric shall be sealed such that the quoted performance is not compromised. This requires a resilient seal in order to prevent vibration passing into the lightweight building fabric elements and re-radiating as noise. Figure 3109/F1 attached shows a typical pipework penetration resilient seal arrangement. No plant shall be fixed to lightweight cladding to avoid drumming issues.

Figure 3109/F1 Duct/Pipe Penetration Detail Through External Wall/Roof Lining

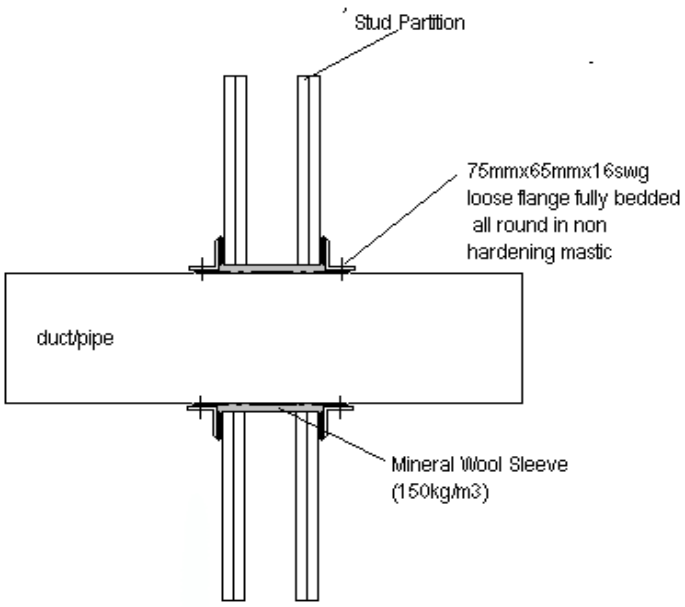

7.0 Preliminary HGV Noise Impact Assessment

The following section reviews the noise impact of HGVs accessing the proposed site along the new access road and on existing highways. It is based on traffic forecasting data contained within LvW Highways Ltd's transport assessment report dated 10th July 2013.

7.1 Impact on A487

Vehicles accessing the proposed AD Facility would access the site from a new junction off the A487 between Cardigan and Penparc. The following assesses the predicted impact for peak hour flows with and without development 2014 and 2024:

Peak hour (AM/PM)	2014 baseline flow without development	2014 flow with development	Change in noise level (dB)	Impact
0800-0900	689	718	0.2	Negligible
1700-1800	675	693	0.1	Negligible
Peak hour (AM/PM)	2024 baseline flow without development	2024 flow with development	Change in noise level (dB)	Impact
0800-0900	785	818	0.2	Negligible
1700-1800	771	790	0.1	Negligible

Development traffic is therefore indicated to have a negligible noise impact on A487 noise levels.

7.2 Impact of Traffic on Access Road

A noise map has been plotted predicting noise levels ($L_{eq,1hr}$) along the proposed site access road, Noise Map 3109/NM2 shows predicted noise levels for the busiest estimated hour (1000-1100; ref Table 8 of LvW report) – including 4no tractor/compactor and 2no 7.5T lorry movements.

3109/NM2 Noise Map showing predicted access road noise levels

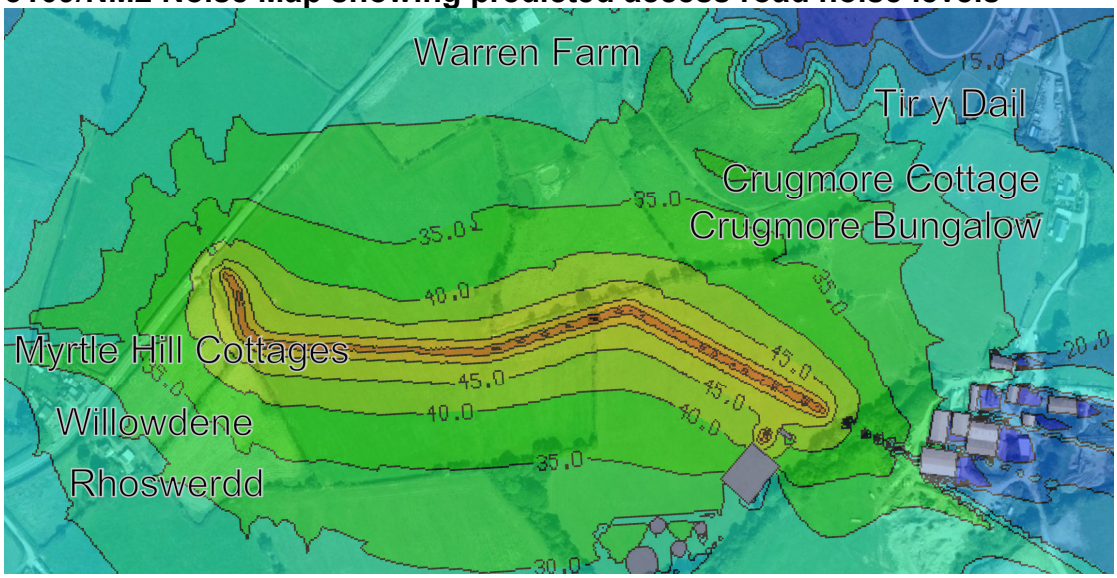

With the proposed access road kept away from critical receivers, noise levels from HGVs along the access road are indicated to be less than 30dBL_{Aeq}, during the busiest hour at the closest receivers (Warren Farm, Mytle Hill, Willowdene, and Rhoswerdd). With the closest critical receivers close to the A487 predicted noise levels would also be well below the 50-55dB$L_{Aeq,1hr}$ existing typical daytime ambient noise levels recorded at Position 3.

8.0 Conclusion

An environmental noise survey has been carried out at Crugmore Farm, Penparc, Cardigan, SA43 1RD where an anaerobic digestion (AD) facility is proposed.

At this stage, noise emissions can be controlled by suitably worded planning conditions setting environmental noise criteria at the closest residential receivers. Criteria have been proposed in Section 4.0 of this report based on measured background noise levels and current planning guidance. These criteria to be met with all plant operating normally.

Environmental noise criteria shall be confirmed acceptable by the local planners/EHO prior to any plant orders being placed.

A noise model has been set up predicting noise levels from proposed AD site activities for comparison against these environmental noise limits. The noise model is based on initial plant data received and database figures from past similar projects, and will be updated as plant data is finalised during detailed design stage.

Existing background noise levels are relatively low (quiet) and therefore proposed environmental noise criteria are strict. The assessment indicates significant plant should be located within buildings as the most practical way to meet these criteria.

An assessment of the noise impact from development traffic (HGVs) has also been carried out. With the proposed access road route to the A487 kept away from residences, traffic noise impact is indicated to be negligible.

P McGrath
Hunter Acoustics

Appendix A

Acoustic Terminology

Human response to noise depends on a number of factors including; Loudness, Frequency content, and variations in level with time. Various frequency weightings and statistical indices have been developed in order to objectively quantify 'annoyance'. The following units have been used in this report :

dB(A) : The sound pressure level weighted to correspond with the frequency response of the human ear, and therefore a persons subjective response to frequency content.

L_{eq} : The Equivalent continuous sound level is a notional steady state level which over a quoted time period would have the same acoustic energy content as the actual fluctuating noise measured over that period.

L_{max} : The highest instantaneous sound level recorded during the measurement period.

L_{10} : The sound level which is exceeded for 10% of the measurement period. i.e. The level exceeded for 6 minutes of a 1 hour measurement - often used as a measure of road traffic noise.

L_{90} : The sound level which is exceeded for 90% of the measurement period. i.e. The level exceeded for 54 minutes of a 1 hour measurement - used as a measure of background noise.

Appendix B – Not Used

Appendix C – Preliminary Acoustic Model Results - Daytime

Crugmore Bungalow, Crugmore First Floor	<- - ACTIVITY - ->				SOUND	% ON-	EQUIV.	SOURCE	ANGLE	MAJOR BARRIER			LEQ		<- - - - - - - CORRECTIONS - - - - - - ->					ACTIVITY
	NUM.	WRK.	TY	CATE-GORY	POWER LEVEL	TIME	ON-TIME	REC. DIST.	OF VIEW	NO.	HT	ATT	@ 10M	ON-TIME	DIST-ANCE	SOFT GROUND	BARR-IER	ANGLE	REFLECT-ION	TOTAL
Station Transformer [1]	3/	8	STA	1	103.0	100	-	317.0	-	-348	90	-3.7	75	0	-30.0	0.0	-3.7	-	0	41
Biofilter Fan	4/	7	STA	1	96.0	100	-	348.0	-	1	92	-24.3	68	0	-30.8	0.0	-10.0	-	0	27
Reception Building	18/	4	SIT	1	84.0	100	1	300.2	-	-125	95	0	56	0	-29.6	0.0	0.0	-	0	26
Reception Building	18/	5	SIT	1	84.0	100	1	300.2	-	-125	95	0	56	0	-29.6	0.0	0.0	-	0	26
Reception Building	18/	3	SIT	1	84.0	100	1	307.0	-	-349	90	-0.8	56	0	-29.8	0.0	-0.8	-	0	25
Reception Building	18/	6	SIT	1	84.0	100	1	342.7	-	-125	95	0	56	0	-30.7	0.0	0.0	-	0	25
Tractor + Tankers	12/	9	HAU	1	83.0	17	-	58.2	1.4	-125	95	0	55	-7.7	-7.8	0.0	0.0	-21	0	19
CHP Exhaust (High Level)	2/	2	STA	1	78.5	100	-	323.3	-	-125	95	0	50.5	0	-30.2	-2.5	-2.5	-	0	18
CHP Container (Low Level)	1/	1	STA	1	84.0	100	-	329	-	1	92	-14.9	56	0	-30.4	-4.4	-10.0	-	0	16
Hydraulic Mixer	17/	34	STA	1	78.9	40	-	411.8	-	2	84	0	50.9	-4	-32.3	0.0	0.0	-	0	15
Tractor + Tankers	12/	13	HAU	1	83.0	17	-	274.7	5.2	6	92	-19.1	55	-7.7	-14.4	0.0	-3.2	-15.4	0	14
Hydraulic Mixer	17/	35	STA	1	78.9	40	-	431.7	-	1	84	0	50.9	-4	-32.7	0.0	0.0	-	0	14
Tractor + Tankers	12/	11	HAU	1	83.0	17	-	286.5	5.3	6	92	-16.1	55	-7.7	-14.6	0.0	-3.8	-15.3	0	14
7.5T Trucks	13/	9	HAU	1	80.0	10	-	58.2	1.4	-125	95	0	52	-10	-7.8	0.0	0.0	-21	0	13
7.5T Trucks	13/	13	HAU	1	80.0	10	-	274.7	5.2	6	92	-19.1	52	-10	-14.4	0.0	-3.2	-15.4	0	9
7.5T Trucks	13/	11	HAU	1	80.0	10	-	286.5	5.3	6	92	-16.1	52	-10	-14.6	0.0	-3.8	-15.3	0	8
23T Refuse Collection Vehicles	14/	9	HAU	1	78.0	5	-	58.2	1.4	-125	95	0	50	-13	-7.8	0.0	0.0	-21	0	8
Hydraulic Mixer	17/	29	STA	1	78.9	40	-	383.2	-	2	89	-22.3	50.9	-4	-31.7	0.0	-10.0	-	0	5
Hydraulic Mixer	17/	30	STA	1	78.9	40	-	390	-	1	92	-11.3	50.9	-4	-31.8	0	-10.0	-	0	5
Hydraulic Mixer	17/	33	STA	1	78.9	40	-	411.5	-	3	93	-9.9	50.9	-4	-32.3	0.0	-9.9	-	0	5
Hydraulic Mixer	17/	32	STA	1	78.9	40	-	413.2	-	4	93	-17.8	50.9	-4	-32.3	0.0	-10.0	-	0	5
Hydraulic Mixer	17/	31	STA	1	78.9	40	-	416.1	-	4	93	-16.8	50.9	-4	-32.4	0.0	-10.0	-	0	5
23T Refuse Collection Vehicles	14/	13	HAU	1	78.0	5	-	274.7	5.2	6	92	-19.1	50	-13	-14.4	0.0	-3.2	-15.4	0	4
Hydraulic Mixer	17/	36	STA	1	78.9	40	-	455.1	-	5	95.0	-24.3	50.9	-4	-33.2	0.0	-10.0	-	0	4
23T Refuse Collection Vehicles	14/	11	HAU	1	78.0	5	-	286.5	5.3	6	92	-16.1	50	-13	-14.6	0.0	-3.8	-15.3	0	3
25T Tankers	15/	14	HAU	1	76.0	1	-	50.9	1.7	-125	95	0	48	-20	-7.3	0	0.0	-20.3	0	0
25T Tankers	15/	9	HAU	1	76.0	1	-	58.2	1.4	-125	95	0	48	-20	-7.8	0	0.0	-21	0	-1
25T Tankers	15/	16	HAU	1	76.0	1	-	88.9	2.2	1	92	-20	48	-20	-9.6	0.0	-5.3	-19.2	0	-6
25T Tankers	15/	19	HAU	1	76.0	1	-	236.5	1.9	-347	90	-2.2	48	-20	-13.8	0.0	-1.9	-19.7	0	-7
25T Tankers	15/	20	HAU	1	76.0	1	-	461.9	2.5	9	84	-4.3	48	-20	-16.6	0.0	-2.4	-18.6	0	-10
25T Tankers	15/	17	HAU	1	76.0	1	-	467.4	7.8	5	95	-24.3	48	-20	-16.7	0.0	-10.0	-13.6	0	-12
25T Tankers	15/	10							0.6	ANGLE CUT-OFF										
Tractor + Tankers	12/	10							0.6	ANGLE CUT-OFF										
7.5T Trucks	13/	10							0.6	ANGLE CUT-OFF										
23T Refuse Collection Vehicles	14/	10							0.6	ANGLE CUT-OFF										
Tractor + Tankers	12/	12							0.5	ANGLE CUT-OFF										
7.5T Trucks	13/	12							0.5	ANGLE CUT-OFF										
23T Refuse Collection Vehicles	14/	12							0.5	ANGLE CUT-OFF										
25T Tankers	15/	15							0.2	ANGLE CUT-OFF										
25T Tankers	15/	18							0.6	ANGLE CUT-OFF										
																			Total from Fixed Plant	42
																			Total from Haul Road	22
																			TOTAL	**42**

Warren Farm First Floor	<- - ACTIVITY - ->				SOUND POWER LEVEL	% ON-TIME	EQUIV. ON-TIME	SOURCE REC. DIST.	ANGLE OF VIEW	MAJOR BARRIER			LEQ @ 10M	ON-TIME	<- - - - - - - - CORRECTIONS - - - - - - ->					ACTIVITY TOTAL
	NUM.	WRK.	TY	CATE-GORY						NO.	HT	ATT			DIST-ANCE	SOFT GROUND	BARR-IER	ANGLE	REFLECT-ION	
Station Transformer [1]	3/	8	STA	1	103.0	100	-	391.4	-	-5	100	-11.1	75	0	-31.9	0.0	-11.1	-	0	32
Reception Building	18/	6	SIT	1	84.0	100	1	411.6	-	-5	100	-8.7	56	0	-32.3	0.0	-8.7	-	0	15
Reception Building	18/	4	SIT	1	84.0	100	1	394.5	-	-5	100	-10.3	56	0	-31.9	0.0	-10.3	-	0	14
CHP Container (Low Level)	1/	1	STA	1	84.0	100	-	399.2	-	-5	100	-10.3	56	0	-32	-6	-10.3	-	0	14
Reception Building	18/	3	SIT	1	84.0	100	1	394.5	-	-5	100	-10.5	56	0	-31.9	0.0	-10.5	-	0	14
Hydraulic Mixer	17/	34	STA	1	78.9	40	-	458.4	-	-122	95	-0.1	50.9	-4	-33.2	0.0	-0.1	-	0	14
Reception Building	18/	5	SIT	1	84.0	100	1	424.4	-	-5	100	-9.9	56	0	-32.6	0.0	-9.9	-	0	14
Hydraulic Mixer	17/	35	STA	1	78.9	40	-	456.5	-	5	95	-0.2	50.9	-4	-33.2	0.0	-0.2	-	0	14
Hydraulic Mixer	17/	31	STA	1	78.9	40	-	424.9	-	-122	95	-1.3	50.9	-4	-32.6	0.0	-1.3	-	0	13
Biofilter Fan	4/	7	STA	1	96.0	100	-	423.5	-	1	92	-24.3	68	0	-32.5	0.0	-24.3	-	0	11
CHP Exhaust (High Level)	2/	2	STA	1	78.5	100	-	396.8	-	-5	100	-8.1	50.5	0	-32	-5.2	-8.1	-	0	10
Hydraulic Mixer	17/	32	STA	1	78.9	40	-	434.4	-	4	93	-7.8	50.9	-4	-32.8	0.0	-7.8	-	0	6
Hydraulic Mixer	17/	33	STA	1	78.9	40	-	447.6	-	3	93	-12.2	50.9	-4	-33.0	0.0	-12.2	-	0	2
Tractor + Tankers	12/	9	HAU	1	83.0	17	-	396.2	3.9	-36	105	-16	55	-7.7	-16.0	0.0	-14.8	-16.6	0	0
Tractor + Tankers	12/	11	HAU	1	83.0	17	-	152.8	1.5	-6	100	-15.3	55	-7.7	-11.9	0.0	-15.1	-20.9	0	-1
Tractor + Tankers	12/	13	HAU	1	83.0	17	-	153.9	1.4	6	92	-19.9	55	-7.7	-11.9	0.0	-15.2	-21	0	-1
Hydraulic Mixer	17/	30	STA	1	78.9	40	-	442.1	-	2	89	-15.1	50.9	-4	-32.9	0.0	-15.1	-	0	-1
Tractor + Tankers	12/	12	HAU	1	83.0	17	-	367.8	1.2	-5	100	-11.5	55	-7.7	-15.7	0.0	-11.4	-21.6	0	-1
Tractor + Tankers	12/	10	HAU	1	83.0	17	-	398.6	2	6	92	-18.3	55	-7.7	-16.0	0.0	-13.2	-19.6	0	-2
Hydraulic Mixer	17/	29	STA	1	78.9	40	-	442.5	-	2	89	-16.6	50.9	-4	-32.9	0.0	-16.6	-	0	-3
7.5T Trucks	13/	9	HAU	1	80.0	10	-	396.2	3.9	-36	105	-16	52	-10	-16.0	0.0	-14.8	-16.6	0	-5
7.5T Trucks	13/	11	HAU	1	80.0	10	-	152.8	1.5	-6	100	-15.3	52	-10	-11.9	0.0	-15.1	-20.9	0	-6
7.5T Trucks	13/	13	HAU	1	80.0	10	-	153.9	1.4	6	92	-19.9	52	-10	-11.9	0.0	-15.2	-21	0	-6
7.5T Trucks	13/	12	HAU	1	80.0	10	-	367.8	1.2	-5	100	-11.5	52	-10	-15.7	0.0	-11.4	-21.6	0	-7
7.5T Trucks	13/	10	HAU	1	80.0	10	-	398.6	2	6	92	-18.3	52	-10	-16	0.0	-13.2	-19.6	0	-7
23T Refuse Collection Vehicles	14/	9	HAU	1	78.0	5	-	396.2	3.9	-36	105	-16	50	-13	-16	0.0	-14.8	-16.6	0	-10
Hydraulic Mixer	17/	36	STA	1	78.9	40	-	457.2	-	5	95.0	-24.3	50.9	-4	-33.2	0.0	-24.3	-	0	-11
23T Refuse Collection Vehicles	14/	11	HAU	1	78.0	5	-	152.8	1.5	-6	100	-15.3	50	-13	-11.9	0.0	-15.1	-20.9	0	-11
23T Refuse Collection Vehicles	14/	13	HAU	1	78.0	5	-	153.9	1.4	6	92	-19.9	50	-13	-11.9	0.0	-15.2	-21	0	-11
23T Refuse Collection Vehicles	14/	12	HAU	1	78.0	5	-	367.8	1.2	-5	100	-11.5	50	-13	-15.7	0.0	-11.4	-21.6	0	-12
23T Refuse Collection Vehicles	14/	10	HAU	1	78.0	5	-	398.6	2	6	92	-18.3	50	-13	-16.0	0.0	-13.2	-19.6	0	-12
25T Tankers	15/	19	HAU	1	76.0	1	-	411.2	4.1	-122	95	-8.7	48	-20	-16.1	0.0	-8.7	-16.4	0	-13
25T Tankers	15/	15	HAU	1	76.0	1	-	420.8	4.7	2	89	-19.8	48	-20	-16.2	0.0	-11.4	-15.8	0	-15
25T Tankers	15/	20	HAU	1	76.0	1	-	259.6	1.7	-122	95	-9.1	48	-20	-14.2	0.0	-9.1	-20.1	0	-15
25T Tankers	15/	18	HAU	1	76.0	1	-	326.9	2.2	-122	95	-9.2	48	-20	-15.2	0.0	-9.2	-19.1	0	-16
25T Tankers	15/	17	HAU	1	76.0	1	-	221.3	3.9	5	95	-24.3	48	-20	-13.5	0.0	-13.4	-16.7	0	-16
25T Tankers	15/	9	HAU	1	76.0	1	-	396.2	3.9	-36	105	-16	48	-20	-16.0	0.0	-14.8	-16.6	0	-19
25T Tankers	15/	14	HAU	1	76.0	1	-	400.4	7.2	1	92	-24.3	48	-20	-16.0	0.0	-18.0	-14	0	-20
25T Tankers	15/	10	HAU	1	76.0	1	-	398.6	2	6	92	-18.3	48	-20	-16.0	0.0	-13.2	-19.6	0	-21
25T Tankers	15/	16	HAU	1	76.0	1	-	456.9	9.1	5	95	-24.3	48	-20	-16.6	0.0	-21.1	-13	0	-23
																			Total from Fixed Plant	33
																			Total from Haul Road	8
																			TOTAL	**33**

Rhoswerd. Willowdene, Myrtle Hill Cottages First Floor	<- - ACTIVITY - ->				SOUND POWER LEVEL	% ON-TIME	EQUIV. ON-TIME	SOURCE REC. DIST.	ANGLE OF VIEW	MAJOR BARRIER			LEQ @ 10M	ON-TIME	<- - - - - - - - CORRECTIONS - - - - - - ->					ACTIVITY TOTAL
	NUM.	WRK.	TY	CATE-GORY						NO.	HT	ATT			DIST-ANCE	SOFT GROUND	BARR-IER	ANGLE	REFLECT-ION	
Station Transformer [1]	3/	8	STA	1	103.0	100	-	524.1	-	0	0	0	75	0	-34.4	0.0	0.0	-	0	41
Biofilter Fan	4/	7	STA	1	96.0	100	-	515.3	-	-147	85	-2	68	0	-34.2	0.0	-2.0	-	0	32
Reception Building	18/	3	SIT	1	84.0	100	1	507.5	-	0	0	0	56	0	-34.1	0	0.0	-	0	22
Reception Building	18/	6	SIT	1	84.0	100	1	507.9	-	0	0	0	56	0	-34.1	0.0	0.0	-	0	22
CHP Container (Low Level)	1/	1	STA	1	84.0	100	-	517.5	-	0	0	0	56	0	-34.3	-5	0.0	-	0	22
Reception Building	18/	5	SIT	1	84.0	100	1	532.1	-	0	0	0	56	0	-34.5	0	0.0	-	0	22
Reception Building	18/	4	SIT	1	84.0	100	1	534.7	-	0	0	0	56	0	-34.6	0	0.0	-	0	21
CHP Exhaust (High Level)	2/	2	STA	1	78.5	100	-	521.3	-	0	0	0	50.5	0	-34.3	-2.6	0.0	-	0	16
Hydraulic Mixer	17/	31	STA	1	78.9	40	-	450.5	-	9	84	0	50.9	-4	-33.1	0	0.0	-	0	14
Hydraulic Mixer	17/	35	STA	1	78.9	40	-	459.3	-	5	95.0	-4.7	50.9	-4	-33.2	0.0	-4.7	-	0	9
Hydraulic Mixer	17/	34	STA	1	78.9	40	-	480.8	-	5	95	-5	50.9	-4	-33.6	0	-5.0	-	0	8
Tractor + Tankers	12/	13	HAU	1	83.0	17	-	342.2	1.7	1	92	-15.6	55	-7.7	-15.3	0.0	-3.6	-20.3	0	8
Hydraulic Mixer	17/	32	STA	1	78.9	40	-	460.3	-	4	93	-8.5	50.9	-4	-33.3	0.0	-8.5	-	0	5
Tractor + Tankers	12/	9	HAU	1	83.0	17	-	446.7	2.2	6	92	-17.8	55	-7.7	-16.5	0.0	-7.2	-19.1	0	5
Hydraulic Mixer	17/	36	STA	1	78.9	40	-	435.8	-	6	83.9	-10.3	50.9	-4	-32.8	0.0	-10.3	-	0	4
7.5T Trucks	13/	13	HAU	1	80.0	10	-	342.2	1.7	1	92	-15.6	52	-10	-15.3	0.0	-3.6	-20.3	0	3
Tractor + Tankers	12/	11	HAU	1	83.0	17	-	345.0	1.8	1	92	-20.2	55	-7.7	-15.4	0.0	-10.6	-20	0	1
Hydraulic Mixer	17/	33	STA	1	78.9	40	-	472.3	-	3	93	-13.1	50.9	-4	-33.5	0.0	-13.1	-	0	0
7.5T Trucks	13/	9	HAU	1	80.0	10	-	446.7	2.2	6	92	-17.8	52	-10	-16.5	0.0	-7.2	-19.1	0	-1
23T Refuse Collection Vehicles	14/	13	HAU	1	78.0	5	-	342.2	1.7	1	92	-15.6	50	-13	-15.3	0.0	-3.6	-20.3	0	-2
7.5T Trucks	13/	11	HAU	1	80.0	10	-	345.0	1.8	1	92	-20.2	52	-10	-15.4	0.0	-10.6	-20	0	-4
Hydraulic Mixer	17/	29	STA	1	78.9	40	-	495.9	-	4	93	-17.5	50.9	-4	-33.9	0.0	-17.5	-	0	-5
23T Refuse Collection Vehicles	14/	9	HAU	1	78.0	5	-	446.7	2.2	6	92	-17.8	50	-13	-16.5	0.0	-7.2	-19.1	0	-6
25T Tankers	15/	17	HAU	1	76.0	1	-	273.2	5.6	-146	85	-8	48	-20	-14.4	0.0	-5.6	-15.1	0	-7
Tractor + Tankers	12/	10	HAU	1	83.0	17	-	440.2	1.2	1	92	-16.6	55	-7.7	-16.4	0	-16.6	-21.8	0	-8
Hydraulic Mixer	17/	30	STA	1	78.9	40	-	489.1	-	2	89	-21.3	50.9	-4	-33.8	0.0	-21.3	-	0	-8
23T Refuse Collection Vehicles	14/	11	HAU	1	78.0	5	-	345.0	1.8	1	92	-20.2	50	-13	-15.4	0.0	-10.6	-20	0	-9
25T Tankers	15/	14	HAU	1	76.0	1	-	440.0	5	1	92	-24.3	48	-20	-16.4	0.0	-5.9	-15.6	0	-10
25T Tankers	15/	20	HAU	1	76.0	1	-	240.3	1.9	-146	85	-5	48	-20	-13.8	0.0	-5.0	-19.8	0	-11
7.5T Trucks	13/	10	HAU	1	80.0	10	-	440.2	1.2	1	92	-16.6	52	-10	-16.4	0	-16.6	-21.8	0	-13
25T Tankers	15/	18	HAU	1	76.0	1	-	329.8	2.4	-146	85	-7.8	48	-20	-15.2	0.0	-7.8	-18.7	0	-14
25T Tankers	15/	15	HAU	1	76.0	1	-	403.3	3.5	3	93	-24.3	48	-20	-16.1	0.0	-8.5	-17.1	0	-14
25T Tankers	15/	9	HAU	1	76.0	1	-	446.7	2.2	6	92	-17.8	48	-20	-16.5	0.0	-7.2	-19.1	0	-15
25T Tankers	15/	16	HAU	1	76.0	1	-	313.0	6.2	5	95	-24.3	48	-20	-15.0	0.0	-13.3	-14.6	0	-15
23T Refuse Collection Vehicles	14/	10	HAU	1	78.0	5	-	440.2	1.2	1	92	-16.6	50	-13	-16.4	0.0	-16.6	-21.8	0	-18
25T Tankers	15/	10	HAU	1	76.0	1	-	440.2	1.2	1	92	-16.6	48	-20	-16.4	0.0	-16.6	-21.8	0	-27
Tractor + Tankers	12/	12							0.7	ANGLE CUT-OFF										
7.5T Trucks	13/	12							0.7	ANGLE CUT-OFF										
23T Refuse Collection Vehicles	14/	12							0.7	ANGLE CUT-OFF										
25T Tankers	15/	19							0.6	ANGLE CUT-OFF										
																		Total from Fixed Plant		41
																		Total from Haul Road		12
																		TOTAL		**41**

Glantegfan First Floor	<- - ACTIVITY - ->				SOUND POWER LEVEL	% ON-TIME	EQUIV. ON-TIME	SOURCE REC. DIST.	ANGLE OF VIEW	MAJOR BARRIER			LEQ @ 10M	ON-TIME	<- - - - - - - - CORRECTIONS - - - - - - ->					ACTIVITY TOTAL
	NUM.	WRK.	TY	CATE-GORY						NO.	HT	ATT			DIST-ANCE	SOFT GROUND	BARR-IER	ANGLE	REFLECT-ION	
Station Transformer [1]	3/	8	STA	1	103.0	100	-	511.4	-	-385	87	-1.4	75	0	-34.2	0.0	-1.4	-	0	39
Reception Building	18/	3	SIT	1	84.0	100	1	484.2	-	7	84	-0.1	56	0	-33.7	0.0	-0.1	-	0	22
Reception Building	18/	6	SIT	1	84.0	100	1	484.0	-	6	84	-0.1	56	0	-33.7	0.0	-0.1	-	0	22
Reception Building	18/	4	SIT	1	84.0	100	1	521.9	-	-385	87	0	56	0	-34.4	0.0	0.0	-	0	22
CHP Container (Low Level)	1/	1	STA	1	84.0	100	-	500.5	-	-426	83	-0.1	56	0	-34.0	-3.7	-3.7	-	0	18
Biofilter Fan	4/	7	STA	1	96.0	100	-	486.6	-	4	93	-18.8	68	0	-33.7	0.0	-18.8	-	0	16
CHP Exhaust (High Level)	2/	2	STA	1	78.5	100	-	505.9	-	-385	87	0	50.5	0	-34.1	-1.5	-1.5	-	0	15
Hydraulic Mixer	17/	31	STA	1	78.9	40	-	415.5	-	6	84	0	50.9	-4	-32.4	0	0.0	-	0	15
Hydraulic Mixer	17/	35	STA	1	78.9	40	-	408.3	-	5	95.0	-7.7	50.9	-4	-32.2	0.0	-7.7	-	0	7
Reception Building	18/	5	SIT	1	84.0	100	1	497.6	-	5	95	-15.8	56	0	-33.9	0.0	-15.8	-	0	6
Hydraulic Mixer	17/	34	STA	1	78.9	40	-	431	-	5	95	-8.2	50.9	-4	-32.7	0.0	-8.2	-	0	6
Hydraulic Mixer	17/	32	STA	1	78.9	40	-	421.0	-	4	93	-9.5	50.9	-4	-32.5	0.0	-9.5	-	0	5
Hydraulic Mixer	17/	36	STA	1	78.9	40	-	382.7	-	6	83.9	-12.4	50.9	-4	-31.7	0.0	-12.4	-	0	3
Tractor + Tankers	12/	13	HAU	1	83.0	17	-	475.0	2.5	1	92	-15.6	55	-7.7	-16.8	0.0	-9.8	-18.6	0	2
25T Tankers	15/	17	HAU	1	76.0	1	-	350.4	9.4	0	0	0	48	-20	-15.4	0.0	0.0	-12.8	0	0
Hydraulic Mixer	17/	33	STA	1	78.9	40	-	427.1	-	5	95	-15.2	50.9	-4	-32.6	0.0	-15.2	-	0	-1
7.5T Trucks	13/	13	HAU	1	80.0	10	-	475.0	2.5	1	92	-15.6	52	-10	-16.8	0.0	-9.8	-18.6	0	-3
25T Tankers	15/	19	HAU	1	76.0	1	-	160.5	2.1	-426	83	0	48	-20	-12.1	0.0	0.0	-19.4	0	-4
Tractor + Tankers	12/	9	HAU	1	83.0	17	-	266	1.4	6	92	-17.6	55	-7.7	-14.3	0.0	-15.9	-21.1	0	-4
25T Tankers	15/	20	HAU	1	76.0	1	-	338.7	3.2	0	0	0	48	-20	-15.3	0.0	0.0	-17.5	0	-5
25T Tankers	15/	18	HAU	1	76.0	1	-	137.8	1.2	0	0	0	48	-20	-11.4	0.0	0.0	-21.7	0	-5
Hydraulic Mixer	17/	29	STA	1	78.9	40	-	455.7	-	5	95	-19.7	50.9	-4	-33.2	0.0	-19.7	-	0	-6
25T Tankers	15/	16	HAU	1	76.0	1	-	97.4	2.5	5	95	-24.3	48	-20	-9.9	0.0	-5.9	-18.6	0	-6
Hydraulic Mixer	17/	30	STA	1	78.9	40	-	448.4	-	2	89	-21.6	50.9	-4	-33	0.0	-21.6	-	0	-8
Tractor + Tankers	12/	11	HAU	1	83.0	17	-	472.7	2.7	1	92	-20.4	55	-7.7	-16.7	0.0	-20.4	-18.3	0	-8
23T Refuse Collection Vehicles	14/	13	HAU	1	78.0	5	-	475.0	2.5	1	92	-15.6	50	-13	-16.8	0.0	-9.8	-18.6	0	-8
7.5T Trucks	13/	9	HAU	1	80.0	10	-	266.0	1.4	6	92	-17.6	52	-10	-14.3	0.0	-15.9	-21.1	0	-9
7.5T Trucks	13/	11	HAU	1	80.0	10	-	472.7	2.7	1	92	-20.4	52	-10	-16.7	0.0	-20.4	-18.3	0	-13
23T Refuse Collection Vehicles	14/	9	HAU	1	78.0	5	-	266.0	1.4	6	92	-17.6	50	-13	-14.3	0.0	-15.9	-21.1	0	-14
23T Refuse Collection Vehicles	14/	11	HAU	1	78.0	5	-	472.7	2.7	1	92	-20.4	50	-13	-16.7	0.0	-20.4	-18.3	0	-18
25T Tankers	15/	9	HAU	1	76.0	1	-	266.0	1.4	6	92	-17.6	48	-20	-14.3	0.0	-15.9	-21.1	0	-23
25T Tankers	15/	14	HAU	1	76.0	1	-	256.5	3.3	1	92	-24.3	48	-20	-14.1	0.0	-23.6	-17.4	0	-27
25T Tankers	15/	15	HAU	1	76.0	1	-	207.0	2.2	5	95	-24.3	48	-20	-13.2	0.0	-24.3	-19.2	0	-29
25T Tankers	15/	10							0.7	ANGLE CUT-OFF										
Tractor + Tankers	12/	10							0.7	ANGLE CUT-OFF										
7.5T Trucks	13/	10							0.7	ANGLE CUT-OFF										
23T Refuse Collection Vehicles	14/	10							0.7	ANGLE CUT-OFF										
Tractor + Tankers	12/	12							0.4	ANGLE CUT-OFF										
7.5T Trucks	13/	12							0.4	ANGLE CUT-OFF										
23T Refuse Collection Vehicles	14/	12							0.4	ANGLE CUT-OFF										
																		Total from Fixed Plant		40
																		Total from Haul Road		7
																			TOTAL	**40**

Wellewen First Floor	<- - ACTIVITY - ->				SOUND POWER LEVEL	% ON-TIME	EQUIV. ON-TIME	SOURCE REC. DIST.	ANGLE OF VIEW	MAJOR BARRIER			LEQ @ 10M	ON-TIME	<- - - - - - - - CORRECTIONS - - - - - - ->					ACTIVITY TOTAL
	NUM.	WRK.	TY	CATE-GORY						NO.	HT	ATT			DIST-ANCE	SOFT GROUND	BARR-IER	ANGLE	REFLECT-ION	
Biofilter Fan	4/	7	STA	1	96.0	100	-	681.4	-	-155	85	0	68	0	-36.7	0.0	0.0	-	0	31
Reception Building	18/	5	SIT	1	84.0	100	1	665.8	-	0	0	0	56	0	-36.5	0.0	0.0	-	0	20
Reception Building	18/	6	SIT	1	84.0	100	1	665.7	-	0	0	0	56	0	-36.5	0.0	0.0	-	0	20
Reception Building	18/	3	SIT	1	84.0	100	1	694.2	-	0	0	0	56	0	-36.8	0.0	0.0	-	0	19
Reception Building	18/	4	SIT	1	84.0	100	1	688.7	-	0	0	0	56	0	-36.8	0.0	0.0	-	0	19
Station Transformer [1]	3/	8	STA	1	103.0	100	-	716.2	-	1	92	-19.8	75	0	-37.1	0.0	-19.8	-	0	18
CHP Exhaust (High Level)	2/	2	STA	1	78.5	100	-	710.1	-	1	92	-2.5	50.5	0	-37	0.0	-2.5	-	0	11
Hydraulic Mixer	17/	34	STA	1	78.9	40	-	648.3	-	4	84	0	50.9	-4	-36.2	0.0	0.0	-	0	11
Hydraulic Mixer	17/	35	STA	1	78.9	40	-	654.3	-	4	83.9	0	50.9	-4	-36.3	0.0	0.0	-	0	11
Tractor + Tankers	12/	9	HAU	1	83.0	17	-	548.4	1.9	-353	89	0	55	-7.7	-17.4	0.0	0.0	-19.9	0	10
Tractor + Tankers	12/	13	HAU	1	83.0	17	-	447.6	1.4	1	92	-12.3	55	-7.7	-16.5	0.0	-0.2	-21.2	0	9
Tractor + Tankers	12/	10	HAU	1	83.0	17	-	556.1	1	0	0	0	55	-7.7	-17.5	0.0	0.0	-22.5	0	7
Tractor + Tankers	12/	11	HAU	1	83.0	17	-	422.4	1.4	1	92	-19	55	-7.7	-16.3	0.0	-2.8	-21.1	0	7
7.5T Trucks	13/	9	HAU	1	80.0	10	-	548.4	1.9	-353	89	0	52	-10	-17.4	0.0	0.0	-19.9	0	5
7.5T Trucks	13/	13	HAU	1	80.0	10	-	447.6	1.4	1	92	-12.3	52	-10	-16.5	0.0	-0.2	-21.2	0	4
Hydraulic Mixer	17/	33	STA	1	78.9	40	-	659.6	-	3	93	-8.3	50.9	-4	-36.4	0.0	-8.3	-	0	2
7.5T Trucks	13/	10	HAU	1	80.0	10	-	556.1	1	0	0	0	52	-10	-17.5	0	0.0	-22.5	0	2
7.5T Trucks	13/	11	HAU	1	80.0	10	-	422.4	1.4	1	92	-19	52	-10	-16.3	0.0	-2.8	-21.1	0	2
23T Refuse Collection Vehicles	14/	9	HAU	1	78.0	5	-	548.4	1.9	-353	89	0	50	-13	-17.4	0.0	0.0	-19.9	0	0
23T Refuse Collection Vehicles	14/	13	HAU	1	78.0	5	-	447.6	1.4	1	92	-12.3	50	-13	-16.5	0.0	-0.2	-21.2	0	-1
CHP Container (Low Level)	1/	1	STA	1	84.0	100	-	707	-	1	92	-21.7	56	0	-37	0	-21.7	-	0	-3
23T Refuse Collection Vehicles	14/	10	HAU	1	78.0	5	-	556.1	1	0	0	0	50	-13	-17.5	0.0	0.0	-22.5	0	-3
23T Refuse Collection Vehicles	14/	11	HAU	1	78.0	5	-	422.4	1.4	1	92	-19	50	-13	-16.3	0.0	-2.8	-21.1	0	-3
25T Tankers	15/	16	HAU	1	76.0	1	-	634.6	7	-155	85	0	48	-20	-18.0	0.0	0.0	-14.1	0	-4
Hydraulic Mixer	17/	31	STA	1	78.9	40	-	684.4	-	4	93	-14.6	50.9	-4	-36.7	0.0	-14.6	-	0	-4
Hydraulic Mixer	17/	30	STA	1	78.9	40	-	662.7	-	2	89	-16.1	50.9	-4	-36.4	0	-16.1	-	0	-6
25T Tankers	15/	14	HAU	1	76.0	1	-	556.6	4.2	-393	86	0	48	-20	-17.5	0.0	0.0	-16.3	0	-6
Hydraulic Mixer	17/	29	STA	1	78.9	40	-	661.9	-	2	89	-16.6	50.9	-4	-36.4	0.0	-16.6	-	0	-6
25T Tankers	15/	15	HAU	1	76.0	1	-	592.6	3.3	-155	85	0	48	-20	-17.7	0.0	0.0	-17.4	0	-7
Hydraulic Mixer	17/	32	STA	1	78.9	40	-	673.9	-	4	93	-17.9	50.9	-4	-36.6	0.0	-17.9	-	0	-8
25T Tankers	15/	9	HAU	1	76.0	1	-	548.4	1.9	-353	89	0	48	-20	-17.4	0.0	0.0	-19.9	0	-9
25T Tankers	15/	19	HAU	1	76.0	1	-	622.3	2.1	5	95	-23.9	48	-20	-17.9	0.0	-2.1	-19.3	0	-11
25T Tankers	15/	10	HAU	1	76.0	1	-	556.1	1	0	0	0	48	-20	-17.5	0.0	0.0	-22.5	0	-12
Hydraulic Mixer	17/	36	STA	1	78.9	40	-	660.4	-	5	95	-24.3	50.9	-4	-36.4	0.0	-24.3	-	0	-14
25T Tankers	15/	18	HAU	1	76.0	1	-	667.8	1.6	5	95	-23.5	48	-20	-18.2	0.0	-4.5	-20.4	0	-15
Tractor + Tankers	12/	12							0.6	ANGLE CUT-OFF										
7.5T Trucks	13/	12							0.6	ANGLE CUT-OFF										
23T Refuse Collection Vehicles	14/	12							0.6	ANGLE CUT-OFF										
25T Tankers	15/	17							0.8	ANGLE CUT-OFF										
25T Tankers	15/	20							0.4	ANGLE CUT-OFF										
																	Total from Fixed Plant			33
																	Total from Haul Road			16
																			TOTAL	**33**

Cwrt Farm First Floor	<- - ACTIVITY - ->				SOUND POWER LEVEL	% ON-TIME	EQUIV. ON-TIME	SOURCE REC. DIST.	ANGLE OF VIEW	MAJOR BARRIER			LEQ @ 10M	ON-TIME	<- - - - - - - - CORRECTIONS - - - - - - ->					ACTIVITY TOTAL
	NUM.	WRK.	TY	CATE-GORY						NO.	HT	ATT			DIST-ANCE	SOFT GROUND	BARR-IER	ANGLE	REFLECT-ION	
Reception Building	18/	5	SIT	1	84.0	100	1	574	-	-135	90	0	56	0	-35.2	0	0.0	-	0	21
Reception Building	18/	3	SIT	1	84.0	100	1	605.6	-	-135	90	0	56	0	-35.6	0	0.0	-	0	20
Station Transformer [1]	3/	8	STA	1	103.0	100	-	613.4	-	1	92	-20	75	0	-35.8	0.0	-20.0	-	0	19
CHP Exhaust (High Level)	2/	2	STA	1	78.5	100	-	611.8	-	1	92	-0.6	50.5	0	-35.7	0	-0.6	-	0	14
Tractor + Tankers	12/	9	HAU	1	83.0	17	-	568.7	3	-135	90	0	55	-7.7	-17.6	0.0	0.0	-17.8	0	12
Hydraulic Mixer	17/	34	STA	1	78.9	40	-	615.6	-	4	84	0	50.9	-4	-35.8	0.0	0.0	-	0	11
Hydraulic Mixer	17/	35	STA	1	78.9	40	-	635.1	-	4	83.9	0	50.9	-4	-36.1	0.0	0.0	-	0	11
Biofilter Fan	4/	7	STA	1	96.0	100	-	601.4	-	1	92	-21.8	68	0	-35.6	0.0	-21.8	-	0	11
Tractor + Tankers	12/	10	HAU	1	83.0	17	-	568.0	1.5	-135	90	0	55	-7.7	-17.5	0.0	0.0	-20.7	0	9
7.5T Trucks	13/	9	HAU	1	80.0	10	-	568.7	3	-135	90	0	52	-10	-17.6	0.0	0.0	-17.8	0	7
7.5T Trucks	13/	10	HAU	1	80.0	10	-	568	1.5	-135	90	0	52	-10	-17.5	0.0	0.0	-20.7	0	4
Hydraulic Mixer	17/	33	STA	1	78.9	40	-	625.8	-	3	93	-7.9	50.9	-4	-35.9	0.0	-7.9	-	0	3
23T Refuse Collection Vehicles	14/	9	HAU	1	78.0	5	-	568.7	3	-135	90	0	50	-13	-17.6	0.0	0.0	-17.8	0	2
23T Refuse Collection Vehicles	14/	10	HAU	1	78.0	5	-	568.0	1.5	-135	90	0	50	-13	-17.5	0.0	0.0	-20.7	0	-1
CHP Container (Low Level)	1/	1	STA	1	84.0	100	-	612.8	-	1	92	-22	56	0	-35.7	0	-22.0	-	0	-2
Hydraulic Mixer	17/	30	STA	1	78.9	40	-	613.5	-	2	89	-13.9	50.9	-4	-35.8	0.0	-13.9	-	0	-3
25T Tankers	15/	16	HAU	1	76.0	1	-	474.0	5.5	-135	90	0	48	-20	-16.8	0.0	0.0	-15.1	0	-4
25T Tankers	15/	14	HAU	1	76.0	1	-	566.6	5.9	-135	90	0	48	-20	-17.5	0.0	0.0	-14.9	0	-4
25T Tankers	15/	15	HAU	1	76.0	1	-	549.2	3.7	-135	90	0	48	-20	-17.4	0.0	0.0	-16.8	0	-6
Hydraulic Mixer	17/	31	STA	1	78.9	40	-	651.0	-	4	93	-16.8	50.9	-4	-36.3	0.0	-16.8	-	0	-6
Hydraulic Mixer	17/	32	STA	1	78.9	40	-	639.8	-	4	93	-17.9	50.9	-4	-36.1	0.0	-17.9	-	0	-7
25T Tankers	15/	9	HAU	1	76.0	1	-	568.7	3	-135	90	0	48	-20	-17.6	0.0	0.0	-17.8	0	-7
25T Tankers	15/	10	HAU	1	76.0	1	-	568.0	1.5	-135	90	0	48	-20	-17.5	0.0	0.0	-20.7	0	-10
Hydraulic Mixer	17/	29	STA	1	78.9	40	-	607.9	-	2	89	-22.2	50.9	-4	-35.7	0.0	-22.2	-	0	-11
25T Tankers	15/	17	HAU	1	76.0	1	-	366.2	3	5	95	-24.3	48	-20	-15.6	0.0	-6.8	-17.8	0	-12
Hydraulic Mixer	17/	36	STA	1	78.9	40	-	656.4	-	5	95	-24.3	50.9	-4	-36.3	0.0	-24.3	-	0	-14
25T Tankers	15/	18	HAU	1	76.0	1	-	643.4	1.6	5	95	-23.5	48	-20	-18.1	0.0	-15.4	-20.5	0	-26
Reception Building	18/	4							0.4	ANGLE CUT-OFF										
Reception Building	18/	6							0.7	ANGLE CUT-OFF										
Tractor + Tankers	12/	11							0.2	ANGLE CUT-OFF										
7.5T Trucks	13/	11							0.2	ANGLE CUT-OFF										
23T Refuse Collection Vehicles	14/	11							0.2	ANGLE CUT-OFF										
Tractor + Tankers	12/	12							0.9	ANGLE CUT-OFF										
7.5T Trucks	13/	12							0.9	ANGLE CUT-OFF										
23T Refuse Collection Vehicles	14/	12							0.9	ANGLE CUT-OFF										
Tractor + Tankers	12/	13							0.1	ANGLE CUT-OFF										
7.5T Trucks	13/	13							0.1	ANGLE CUT-OFF										
23T Refuse Collection Vehicles	14/	13							0.1	ANGLE CUT-OFF										
25T Tankers	15/	19							0.9	ANGLE CUT-OFF										
25T Tankers	15/	20							0.7	ANGLE CUT-OFF										
																			Total from Fixed Plant	26
																			Total from Haul Road	15
																			TOTAL	**26**

Rhosllyn, Ger y Rhos First Floor	<- - ACTIVITY - ->				SOUND POWER LEVEL	% ON-TIME	EQUIV. ON-TIME	SOURCE REC. DIST.	ANGLE OF VIEW	MAJOR BARRIER			LEQ @ 10M	ON-TIME	<- - - - - - - - CORRECTIONS - - - - - - ->					ACTIVITY TOTAL
	NUM.	WRK.	TY	CATE-GORY						NO.	HT	ATT			DIST-ANCE	SOFT GROUND	BARR-IER	ANGLE	REFLECT-ION	
Station Transformer [1]	3/	8	STA	1	103.0	100	-	919.5	-	-313	135	-10.5	75	0	-39.3	0.0	-10.5	-	0	25
Reception Building	18/	3	SIT	1	84.0	100	1	908.7	-	-313	135	-10.3	56	0	-39.2	0	-10.3	-	0	7
Reception Building	18/	6	SIT	1	84.0	100	1	922.6	-	-313	135	-10.3	56	0	-39.3	0	-10.3	-	0	6
Reception Building	18/	4	SIT	1	84.0	100	1	888.4	-	-313	135	-10.6	56	0	-39	0	-10.6	-	0	6
Reception Building	18/	5	SIT	1	84.0	100	1	888.4	-	-313	135	-10.6	56	0	-39	0	-10.6	-	0	6
Biofilter Fan	4/	7	STA	1	96.0	100	-	936.1	-	1	92	-24.3	68	0	-39.4	0.0	-24.3	-	0	4
CHP Exhaust (High Level)	2/	2	STA	1	78.5	100	-	923.3	-	-313	135	-9.6	50.5	0	-39.3	0	-9.6	-	0	2
Hydraulic Mixer	17/	34	STA	1	78.9	40	-	986.9	-	-313	135	-8.9	50.9	-4	-39.9	0.0	-8.9	-	0	-2
Hydraulic Mixer	17/	33	STA	1	78.9	40	-	991.7	-	-313	135	-9.2	50.9	-4	-39.9	0.0	-9.2	-	0	-2
CHP Container (Low Level)	1/	1	STA	1	84.0	100	-	927.9	-	1	92	-19.4	56	0	-39.4	0	-19.4	-	0	-3
Hydraulic Mixer	17/	30	STA	1	78.9	40	-	971.0	-	2	89	-10.6	50.9	-4	-39.8	0.0	-10.6	-	0	-4
Tractor + Tankers	12/	9	HAU	1	83.0	17	-	579.8	1.3	-313	135	-12.2	55	-7.7	-17.6	0.0	-12.2	-21.3	0	-4
Tractor + Tankers	12/	11	HAU	1	83.0	17	-	661.5	1.3	6	92	-14	55	-7.7	-18.2	0.0	-11.9	-21.3	0	-4
Tractor + Tankers	12/	13	HAU	1	83.0	17	-	634.8	1.3	6	92	-18.1	55	-7.7	-18.0	0.0	-13.5	-21.6	0	-6
7.5T Trucks	13/	9	HAU	1	80.0	10	-	579.8	1.3	-313	135	-12.2	52	-10	-17.6	0.0	-12.2	-21.3	0	-9
7.5T Trucks	13/	11	HAU	1	80.0	10	-	661.5	1.3	6	92	-14	52	-10	-18.2	0.0	-11.9	-21.3	0	-9
Hydraulic Mixer	17/	32	STA	1	78.9	40	-	999.4	-	4	93	-17.8	50.9	-4	-40	0.0	-17.8	-	0	-11
7.5T Trucks	13/	13	HAU	1	80.0	10	-	634.8	1.3	6	92	-18.1	52	-10	-18.0	0.0	-13.5	-21.6	0	-11
23T Refuse Collection Vehicles	14/	9	HAU	1	78.0	5	-	579.8	1.3	-313	135	-12.2	50	-13	-17.6	0.0	-12.2	-21.3	0	-14
23T Refuse Collection Vehicles	14/	11	HAU	1	78.0	5	-	661.5	1.3	6	92	-14	50	-13	-18.2	0.0	-11.9	-21.3	0	-14
Hydraulic Mixer	17/	29	STA	1	78.9	40	-	963.7	-	2	89	-22.2	50.9	-4	-39.7	0.0	-22.2	-	0	-15
23T Refuse Collection Vehicles	14/	13	HAU	1	78.0	5	-	634.8	1.3	6	92	-18.1	50	-13	-18.0	0.0	-13.5	-21.6	0	-16
25T Tankers	15/	14	HAU	1	76.0	1	-	564.1	2.4	-313	135	-12.7	48	-20	-17.5	0.0	-12.7	-18.8	0	-21
25T Tankers	15/	9	HAU	1	76.0	1	-	579.8	1.3	-313	135	-12.2	48	-20	-17.6	0.0	-12.2	-21.3	0	-23
25T Tankers	15/	15	HAU	1	76.0	1	-	476.6	1.2	-313	135	-13.6	48	-20	-16.8	0.0	-13.6	-21.6	0	-24
25T Tankers	15/	16	HAU	1	76.0	1	-	248.7	1.1	-313	135	-16.1	48	-20	-14.1	0.0	-16.1	-22.1	0	-24
25T Tankers	15/	17	HAU	1	76.0	1	-	964.2	3.2	5	95	-24.3	48	-20	-19.8	0.0	-17.2	-17.5	0	-27
25T Tankers	15/	10							0.6	ANGLE CUT-OFF										
Tractor + Tankers	12/	10							0.6	ANGLE CUT-OFF										
7.5T Trucks	13/	10							0.6	ANGLE CUT-OFF										
23T Refuse Collection Vehicles	14/	10							0.6	ANGLE CUT-OFF										
Tractor + Tankers	12/	12							0.4	ANGLE CUT-OFF										
7.5T Trucks	13/	12							0.4	ANGLE CUT-OFF										
23T Refuse Collection Vehicles	14/	12							0.4	ANGLE CUT-OFF										
25T Tankers	15/	18							0.6	ANGLE CUT-OFF										
25T Tankers	15/	19							0.3	ANGLE CUT-OFF										
25T Tankers	15/	20							0.9	ANGLE CUT-OFF										
Hydraulic Mixer	17/	31						1006.6		DISTANCE CUT-OFF										
Hydraulic Mixer	17/	35						1009.8		DISTANCE CUT-OFF										
Hydraulic Mixer	17/	36						1035.5		DISTANCE CUT-OFF										
																			Total from Fixed Plant	26
																			Total from Haul Road	2
																			TOTAL	**26**

Cwm March First Floor	<- - ACTIVITY - ->				SOUND POWER LEVEL	% ON-TIME	EQUIV. ON-TIME	SOURCE REC. DIST.	ANGLE OF VIEW	MAJOR BARRIER			LEQ @ 10M	ON-TIME	<- - - - - - - CORRECTIONS - - - - - - ->					ACTIVITY TOTAL
	NUM.	WRK.	TY	CATE-GORY						NO.	HT	ATT			DIST-ANCE	SOFT GROUND	BARR-IER	ANGLE	REFLECT-ION	
Station Transformer [1]	3/	8	STA	1	103.0	100	-	815.1	-	-240	120	-3.6	75	0	-38.2	0.0	-3.6	-	0	33
Reception Building	18/	6	SIT	1	84.0	100	1	833.4	-	-240	120	-2.6	56	0	-38.4	0	-2.6	-	0	15
Reception Building	18/	3	SIT	1	84.0	100	1	804.6	-	-240	120	-3.2	56	0	-38.1	0	-3.2	-	0	15
Reception Building	18/	4	SIT	1	84.0	100	1	792.9	-	-240	120	-3.4	56	0	-38	0	-3.4	-	0	15
Reception Building	18/	5	SIT	1	84.0	100	1	792.9	-	-240	120	-3.4	56	0	-38	0	-3.4	-	0	15
CHP Exhaust (High Level)	2/	2	STA	1	78.5	100	-	820.7	-	-240	120	-2	50.5	0	-38.3	-1.2	-2.0	-	0	10
Hydraulic Mixer	17/	35	STA	1	78.9	40	-	924.0	-	-240	###	-0.7	50.9	-4	-39.3	0.0	-0.7	-	0	7
Hydraulic Mixer	17/	34	STA	1	78.9	40	-	902.5	-	-240	120	-0.9	50.9	-4	-39.1	0.0	-0.9	-	0	7
Biofilter Fan	4/	7	STA	1	96.0	100	-	841.9	-	1	92	-24.3	68	0	-38.5	0	-24.3	-	0	5
Tractor + Tankers	12/	11	HAU	1	83.0	17	-	722.2	1.9	6	92	-15.4	55	-7.7	-18.6	0.0	-5.9	-19.9	0	3
Tractor + Tankers	12/	13	HAU	1	83.0	17	-	703.2	1.8	6	92	-18.8	55	-7.7	-18.5	0.0	-6.1	-20.1	0	3
CHP Container (Low Level)	1/	1	STA	1	84.0	100	-	826.2	-	1	92	-16.9	56	0	-38.4	-3.8	-16.9	-	0	1
Hydraulic Mixer	17/	33	STA	1	78.9	40	-	904.1	-	3	93	-8.9	50.9	-4	-39.1	0.0	-8.9	-	0	-1
7.5T Trucks	13/	11	HAU	1	80.0	10	-	722.2	1.9	6	92	-15.4	52	-10	-18.6	0.0	-5.9	-19.9	0	-2
7.5T Trucks	13/	13	HAU	1	80.0	10	-	703.2	1.8	6	92	-18.8	52	-10	-18.5	0.0	-6.1	-20.1	0	-3
Hydraulic Mixer	17/	30	STA	1	78.9	40	-	882.4	-	2	89	-10.9	50.9	-4	-38.9	0.0	-10.9	-	0	-3
23T Refuse Collection Vehicles	14/	11	HAU	1	78.0	5	-	722.2	1.9	6	92	-15.4	50	-13	-18.6	0.0	-5.9	-19.9	0	-7
23T Refuse Collection Vehicles	14/	13	HAU	1	78.0	5	-	703.2	1.8	6	92	-18.8	50	-13	-18.5	0.0	-6.1	-20.1	0	-8
Hydraulic Mixer	17/	31	STA	1	78.9	40	-	912.3	-	4	93	-16.8	50.9	-4	-39.2	0.0	-16.8	-	0	-9
Hydraulic Mixer	17/	32	STA	1	78.9	40	-	907.9	-	4	93	-17.8	50.9	-4	-39.2	0.0	-17.8	-	0	-10
25T Tankers	15/	14	HAU	1	76.0	1	-	288.4	1.5	11	98	-5	48	-20	-14.6	0.0	-3.9	-20.8	0	-11
Hydraulic Mixer	17/	29	STA	1	78.9	40	-	875.2	-	2	89	-22.2	50.9	-4	-38.9	0.0	-22.2	-	0	-14
25T Tankers	15/	20	HAU	1	76.0	1	-	930.8	1.2	1	92	-7.8	48	-20	-19.7	0.0	-3.3	-21.9	0	-17
Hydraulic Mixer	17/	36	STA	1	78.9	40	-	948.6	-	5	95	-24.3	50.9	-4	-39.6	0.0	-24.3	-	0	-17
25T Tankers	15/	17	HAU	1	76.0	1	-	952.4	3.8	5	95	-24.3	48	-20	-19.8	0.0	-13.8	-16.8	0	-22
25T Tankers	15/	9							0.9	ANGLE CUT-OFF										
Tractor + Tankers	12/	9							0.9	ANGLE CUT-OFF										
7.5T Trucks	13/	9							0.9	ANGLE CUT-OFF										
23T Refuse Collection Vehicles	14/	9							0.9	ANGLE CUT-OFF										
25T Tankers	15/	10							0.4	ANGLE CUT-OFF										
Tractor + Tankers	12/	10							0.4	ANGLE CUT-OFF										
7.5T Trucks	13/	10							0.4	ANGLE CUT-OFF										
23T Refuse Collection Vehicles	14/	10							0.4	ANGLE CUT-OFF										
Tractor + Tankers	12/	12							0.3	ANGLE CUT-OFF										
7.5T Trucks	13/	12							0.3	ANGLE CUT-OFF										
23T Refuse Collection Vehicles	14/	12							0.3	ANGLE CUT-OFF										
25T Tankers	15/	15							0.6	ANGLE CUT-OFF										
25T Tankers	15/	16							0.1	ANGLE CUT-OFF										
25T Tankers	15/	18							0.4	ANGLE CUT-OFF										
25T Tankers	15/	19							0.8	ANGLE CUT-OFF										
																			Total from Fixed Plant	33
																			Total from Haul Road	7
																			TOTAL	**34**